JOINT STAFF

AUTOMATED INFORMATION SYSTEMS STRATEGIC PLAN (AISSP)

16 December 1988

Directorate for Information and Resource Management
Information Technology Division
Washington, DC 20318-9200

92-FOI-0744
#433

JOINT STAFF
AUTOMATED INFORMATION SYSTEM
STRATEGIC PLAN (AISSP)

CONTENTS

Page

BACKGROUND 2

Purpose 2

Scope 2

Concept 3

PLANNING FACTORS 3

Requirements 3

Principles 4

Key Support Areas 6

JOINT STAFF STANDARDS 8

Data Communications 9

Applications 9

Data Exchange 11

Workstations 12

SYSTEMS ARCHITECTURES 12

Current Major Systems 12

Planned Major Systems 22

APPENDIX A -- GOALS & OBJECTIVES A-1

APPENDIX B -- PROJECTS IN SUPPORT OF GOALS & OBJECTIVES B-1

JOINT STAFF
AUTOMATED INFORMATION SYSTEM
STRATEGIC PLAN (AISSP)

1. BACKGROUND

a. Purpose. The purposes of the 5-Year AISSP are:

(1) to assess the information systems environment (including technological trends), as required by DoD Directive 7740.2, "Automated Information Systems (AIS) Strategic Planning," 29 July 1987;

(2) to document the approved Joint Staff information systems architecture;

(3) to identify critical AIS mobilization requirements;

(4) to ensure that approved Federal and DoD standards in design, development, and operation of automated systems are met.

b. Scope. This plan describes the automated information system environment that currently supports the mission functions of the Joint Staff, the information systems environment needed to enhance mission accomplishment, and the programs which the Joint Staff is pursuing in progression towards the target environment. The programs and initiatives outlined in this document apply to information resources and systems which directly support the internal operations of the Joint Staff and the Office of the Chairman of the Joint Chiefs of Staff. These include:

(1) All site-unique AIS programs and projects and, where appropriate, interfaces to programs and projects imposed on the Joint Staff.

(2) Information creation resources, such as electronic processing, forms, reproduction support, publications, correspondence, mail management, directives, and reports.

(3) Information storage and disposition resources, such as micrographics, files, records disposition, distribution, application of the Privacy Act, and the vital records program.

c. Concept. The overall, strategic AIS goal is to implement systems which provide effective, responsive, and accurate information to decision makers. This plan is intended to guide the evolution of systems which will be responsive to mission needs despite the complexities of changing requirements and will take advantage of the many improvements in information systems technology. This plan is prepared as an integral part of the overall Joint Staff Information Resources Management (IRM) process. This plan reflects the AIS approach being taken by the Joint Staff in support of the IRM goals and objectives outlined in the Joint Staff Information Management Plan (JSIMP). This plan guides near-term decisions on the design of individual information system projects and shapes long-term evolution toward more integrated systems.

2. **PLANNING FACTORS.** In preparing this plan three major planning factors were considered. These factors are: the requirements of the Joint Staff; the fundamental strategic support principles which form the basis for satisfying the Joint Staff's AIS requirements; and, the key support areas which must be satisfied for Joint Staff mission accomplishment.

a. Requirements. The general requirements of Joint Staff automated information systems include:

(1) Enhancing, consolidating, or replacing existing information systems in support of specialized Joint Staff functional requirements to increase mission effectiveness and/or permit limited reductions in resource requirements (funds, people, equipment, etc.).

(2) Providing the Joint Staff with powerful, flexible, integrated information handling tools to improve responsiveness and reduce dependency on major system development efforts.

(3) Enhancing user-friendliness of information systems to reduce training requirements associated with their use and application.

(4) Eliminating existing hardware/software incompatibilities and other barriers to smooth and timely flow of information; including integrating and upgrading currently installed systems to the greatest possible extent.

(5) Reducing the administrative support required to manage AISs by acquiring systems which shift the processing power to the end users without placing the system administration burden on the user organization.

(6) Achieving increased interoperability through "open systems" concepts and compatibility using established protocols and standards.

(7) Achieving savings by minimizing duplication of effort and obtaining more effective use of common-user and shared resources.

(8) Providing information privacy, security, and protection against unauthorized access, use/abuse, alteration/destruction, or denial consistent with Federal and Department of Defense directives.

b. Principles. The following seven basic tenets were used to establish the foundation upon which the Joint Staff AIS Strategic Plan is built.

(1) Planning. Real productivity comes from understanding functional requirements and applying appropriate automation enhancements to streamline work processes. This requires periodic analysis of functions and processes to tap the full potential of evolving automation technology. Automation is a tool which should be implemented to improve productivity and enhance mission accomplishment within the existing Joint Staff functional and organizational structure. Automation should not be used to artificially drive structural change.

(2) Communication and Coordination. Users must identify automation requirements and assist in the design, implementation and cost determination of systems because they have the best understanding of their functional requirements and work processes. This will require that users be briefed periodically on the benefits of evolving technology in order to fully exploit automation in the Joint Staff. The focus of automated information system development in the Joint Staff must be on users and life-cycle costs if productivity is to be enhanced. The process must ensure that they are the principle players in requirements identification, not just incidental participants.

(3) Alternative Development and Selection. Selection of hardware and software capabilities should be based upon user-identified requirements and accommodated by the Joint Staff information system architecture. The Joint Staff information systems architecture should be

structured in such a manner that it is flexible enough to incorporate the hardware and software needed to meet all current and future requirements. Projects should be phased in to allow the benefits to be measured and to provide necessary progression time for hardware and software baselining, and orderly configuration management.

(4) Benefits Measurement. Doing things faster is a change, but not necessarily a benefit. Prototypes are essential for assessing technology updates. The decision to implement wide scale technology upgrades should be based upon identified requirements, life-cycle cost, the benefits of timeliness, product suitability, environmental impact and effectiveness; not just procurement cost or funds availability.

(5) Training. Automated information systems are the key productivity tools of the staff. Newly assigned personnel must be efficiently brought into the organizational culture.

(6) Security. Joint Staff automated information systems will fully comply with the Joint Staff ADP security program under development. Additionally, specific security procedures will be documented in operating instructions for all systems to ensure that national security information is protected IAW E.O. 12356, DoD and Joint Staff directives.

(7) Access. The connectivity that the Joint Staff information system architecture will provide within the Joint Staff, with other DoD components and Executive Branch agencies requires addressal of the issue of access to automated information systems and data bases. Cognizant system and data base managers will positively control access using protocols and passwords. The access approval process will be automated when software is developed which can discriminate among users/requesters and provide access to only those data bases or data elements whithin data bases that the particular user/requester has authority to view. Process/procedures for gaining access will be documented in operating instructions for each automated information system to ensure that JCS/Joint Staff directives (JCS MOP 39, etc.) controlling access to sensitive predecisional information and strategic and operational planning information are complied with.

c. Key Support Areas. The following key areas have been identified as needing support to fulfill the Joint Staff's goals and objectives and to meet the above requirements.

(1) Standard Joint Staff Data Bases and Applications. Standard applications must allow all users access to a broad range of information processing capabilities in a networked environment. Data bases supporting the standard applications must be accessible in various modes to authorized users. General requirements include: standard programming languages; structured query language; report generation; interactive online file transfer; read/write access protection; multiple levels of computer access control; multilevel security; down-line loading of data base subsets. Specific support requirements include: action tracking, document search and retrieval, personnel, security.

(2) Intelligent Workstations. Standalone information processing capability must be available at each workstation. This processing capability is in addition to network access to standard word processing, data bases, and other applications. For identified users, this capability must include, but not be limited to, electronic spreadsheet, graphics processing, and specialized statistical or mathematical packages. Requirements include: standalone capability as well as the ability to interface with a variety of Joint Staff and JDSSC systems; standalone unclassified telecommunications; support for a wide range of communications protocols; support of shared logic; standalone word processing, graphic, and data management statistical processing software.

(3) Classified Information Processing. Due to the nature of the physical environment within the Joint Staff and the type of data being processed, systems must support information processing to a level of TOP SECRET. Requirements include: fully integrated system allowing mission, mission support, and administrative data to reside together in a TOP SECRET system high environment, and eventual multilevel secure operations.

(4) Document/Information Creation and Distribution. An integrated method of document and information creation and distribution must allow the electronic transmission of documents between individuals and offices within the Joint Staff. A method for transmitting formal, signed documents is also needed. The ability to use this system to electronically transmit correspondence,

tasking, and internal coordination should result in significant improvements in productivity, efficiency, and accountability. Requirements include: transfer of information from any user to any other user on the network; ability to compose, send, reply, forward, file, delete, and acknowledge; ability to electronically "post" information/documents at a central location for as-required access by users.

(5) Inter-Office Message Distribution. In addition to the features provided for document/information creation and distribution, there is a need for electronic verification and accounting of AUTODIN message traffic entering or leaving the Joint Staff through the Joint Chiefs of Staff Information Service Center. Requirements include: automatic routing of incoming text and data message traffic to message addressee; multi-drop addressing; receipt confirmation; priority scheduling; ability to compose, edit, validate, and send outgoing text and data traffic.

(6) Image Processing and Briefing Aids. Integrated software on the network or on the standalone workstations must allow identified users a full range of graphics capabilities, such as pie charts, line graphs, bar charts, and a map capability. Requirements include: conversion of hard copy to digital form for use in data entry; classified facsimile signature on electronic documents; integration of selected data from various data bases and ability to output results in the form of overhead slides or projections.

(7) Electronic Storage and Retrieval of Documents. Systems must provide a standard capability to store and retrieve all types of documents used within the Joint Staff. This system will support an automated micrographics storage/retrieval capability providing rapid access to large amounts of data on a variety of search criteria. Requirements include: key word and string search; multiple document indices generated from title page or table of contents; large volume, privacy and security accountability; access control; hardcopy and long-term (e.g., microform) text storage.

(8) Voice Mail and Messaging. A voice mail and messaging capability with store and forward features is required by a number of executive users. This system should serve as an alternative to the current telephone system in administrative matters. Requirements include: standard electronic mail with voice feature

for senior leadership; ability for system user to leave message; visual signal that mail is awaiting and/or has been received; addressable to office and/or individual.

(9) Video Conferencing. Video conferencing is also required by a number of executive users. Individual conference terminals should be augmented by a shared-use conference facility which is compatible with similar facilities in industry and Government.

(10) Archiving of Office-Level Documents. A capability to electronically archive and manipulate office level documents is required by several directorates. Documents must be processed as images and/or ASCII files and be immediately available to action officers through search and retrieval software. Also included within the office-level document archiving must be distributed access to corporate-level documents and intra-office access of archived documents.

(11) Integrated Graphics and Publishing. An electronic publishing capability is required by identified users to integrate text, graphics, and scanned images in an electronic paste-up format for the purpose of producing "proof ready" published text and graphics products. Companion to the electronic publishing capability is the requirement for a full color paint software application with supporting hardware to satisfy the growing need for color briefing presentations. Also, a computer aided design (CAD) system with the means of performing facilities management functions such as space management and use and architectural/engineering drawings is required.

(12) Continuity of Operations Planning. Critical data needed for continued operations of the Joint Staff must be identified and protected as required by the Continuity of Operations Plan for the Joint Chiefs of Staff (SM-769-85). The COOP needs to be supported by contingency plans for each of the major automated information systems named in this strategic plan.

3. **JOINT STAFF STANDARDS.** Setting standards for satisfying similar requirements within an organization usually produces several cost saving and productivity improving benefits while assuring sources of supply and future connectivity. Standards can be set either through adherance to an internal standard (e.g., WangLAN) or through adoption of an externally accepted standard (e.g., IEEE 802.3). The focus of Joint Staff-accepted standards has changed within the past year from proprietary

systems to more of a government-wide and industry standard approach (i.e., externally accepted). Following is a list of the standards in data communications, applications, and hardware and software interfaces which will form the cornerstones of future Joint Staff AISs.

a. Data Communications

(1) Government Open System Interconnection Profile (GOSIP). The GOSIP standard provides the opportunity for, and the means of, achieving interoperability within multi-vendor networks. The GOSIP will allow a government procurement agency to tell vendors what protocols are required to satisfy an agency's needs for interoperable data communications. It will make the Government compatible with other systems world-wide, not just within the U.S. The GOSIP will define protocols in all seven layers of the OSI model. New protocol development in such areas as forms exchange, office document exchange, graphics, and security is taking place and protocols will be added to the GOSIP as they become well defined. Implementation of this standard, however, must not interfere with the overall security of the system. The standard is required before true interoperability up through the application layer can be achieved. The GOSIP Federal Information Processing Standard (FIPS 146) was released in August 1988 and becomes effective in Feb 1989. The GOSIP FIPS is optional until August 1990. Therefore, interim standards leading to the GOSIP standard must be adopted.

(2) Interim Standard -- Transport Control Protocol/Internet Protocol (TCP/IP). Until the GOSIP standard is adopted and commercially available, TCP/IP, together with Simple Mail Transfer Protocol (SMTP), TELNET, and File Transfer Protocol (FTP), and IEEE 802.3 will provide systems with the functionality to meet networking requirements. Figure 1 depicts the GOSIP standard and the Joint Staff's interim approach for preparing an orderly conversion to the standard.

b. Applications.

(1) Structured Query Language (SQL) -- FIPS Pub 127. In today's environment, a user must know the language of each database he/she wants to query. SQL provides a standard user interface to database management systems so a user only has to learn SQL to use several different databases. The Joint Staff approach is to use SQL as a standard interface and query language but

Figure 1

JOINT STAFF IMPLEMENTATION
OF THE GOVERNMENT OPEN SYSTEM INTERCONNECTION PROFILE

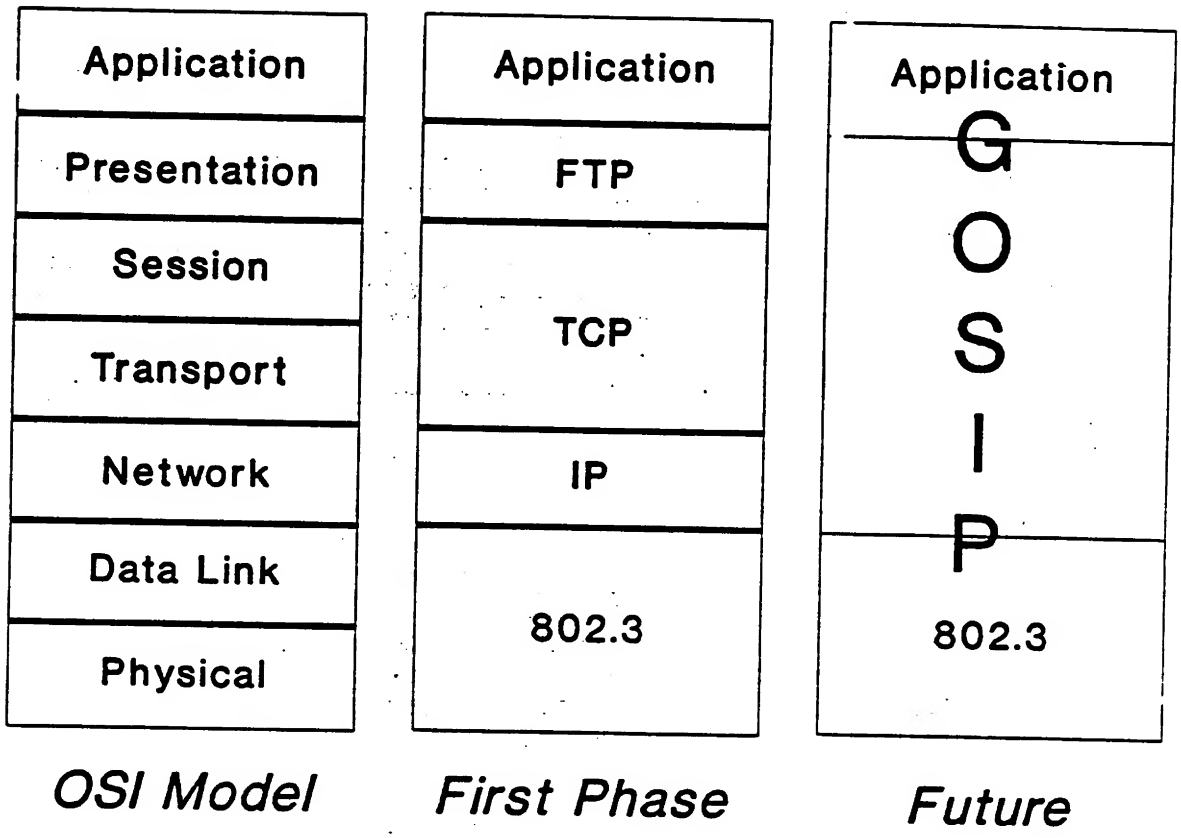

not to require users to be trained in this language. Rather, SQL shells which generate the needed SQL statements will be acquired to insulate users from the language and present query-by-example or near-English language query or similar artificially intelligent interfaces.

(2) Information Resources Dictionary Standard (IRDS). (ANSI X3.138) The Government is using larger quantities of data which typically leads to problems, such as unnecessary duplication of data within an organization and having inconsistent data. We must manage data as a corporate asset to ensure its effective and efficient use. Data element naming conventions are essential to centrally manage corporate data. The data dictionary is the primary tool for administering the data. The Information Resource Dictionary Standard (IRDS) provides the framework necessary for name development. By implementing naming conventions in a central data dictionary, all users will get correct, consistent data and the corporate entity will realize the economy of a corporate database. The Joint Staff IRDS-compliant standard data dictionary is the WIS Dictionary for Information Management (WISDIM) as implemented within the personal computer (PC) version of the software package PC WISDIM.

(3) Portable Operating System for Computer Environments (POSIX). Most applications programs cannot be developed on one machine and run on another with a different operating system without rewriting some of the software, even when using a DoD standard programming language. POSIX will provide a standard interface between an application and the operating system, allowing portability of the software from one machine to another. The standard will apply to all sizes of computers, from personal computers to super computers, and will promote data sharing, thereby enhancing interoperability and reducing costs. The initial standard addresses the interface between UNIX and C, but will evolve to provide interface specifications for more operating systems and application programming languages.

c. Data Exchange. To ensure data can still be passed between Joint Staff users in a multi-vendor environment, an interface standard will be established for each type of software package (i.e., word processing, spreadsheet, etc.). This approach will ensure continued usefulness of existing software packages without precluding users from

purchasing systems which more closely meet all of their requirements.

(1) Word Processing. ASCII Document Format.

(2) Spreadsheet. Data Interchange Format (DIF).

(3) Data Base Management. Standard Data Format (SDF).

d. Workstations. Standard workstations adopted within the current and planned major systems serving the Joint Staff (see below) shall be compatible with the other standards and protocols listed above.

4. SYSTEMS ARCHITECTURES

a. Current Major Systems. The Joint Staff is currently served by three major automation systems and one program. They are the World Wide Military Command and Control System (WWMCCS), the Pentagon Telecommunications System (PTCS), and the Joint Information Management System (JIMS) and the Modern Aids to Planning Program (MAPP). The links and relationships between the major Joint Staff systems are depicted in Figure 2.

(1) Worldwide Military Command and Control System (WWMCCS). WWMCCS is the system that provides the means for operational direction and technical administrative support involved in the function of command and control of US military forces. The Joint Staff portion of the WWMCCS topology is depicted in Figure 3.

(a) WWMCCS comprises:

1 The National Military Command System

2 The command and control systems of the unified and specified commands

3 The WWMCCS-related management and information systems of the headquarters of the Military Departments

4 The command and control systems of the headquarters of the Service component commands.

5 The command and control support systems of DOD agencies.

Figure 2

AUTOMATED INFORMATION SYSTEMS
SERVING THE JOINT STAFF

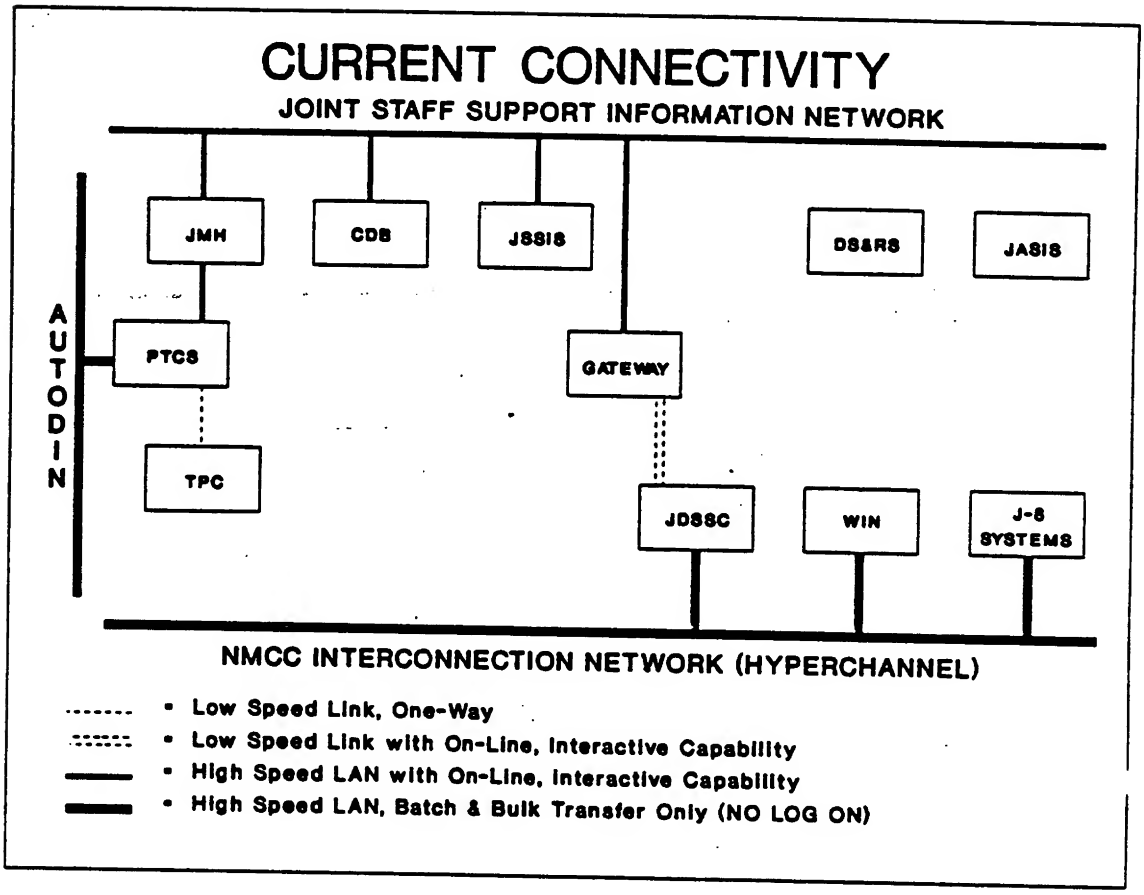

Figure 3

WORLD-WIDE MILITARY COMMAND AND CONTROL SYSTEM
(WMMCCS)

THE ELEMENTS OF WWMCCS

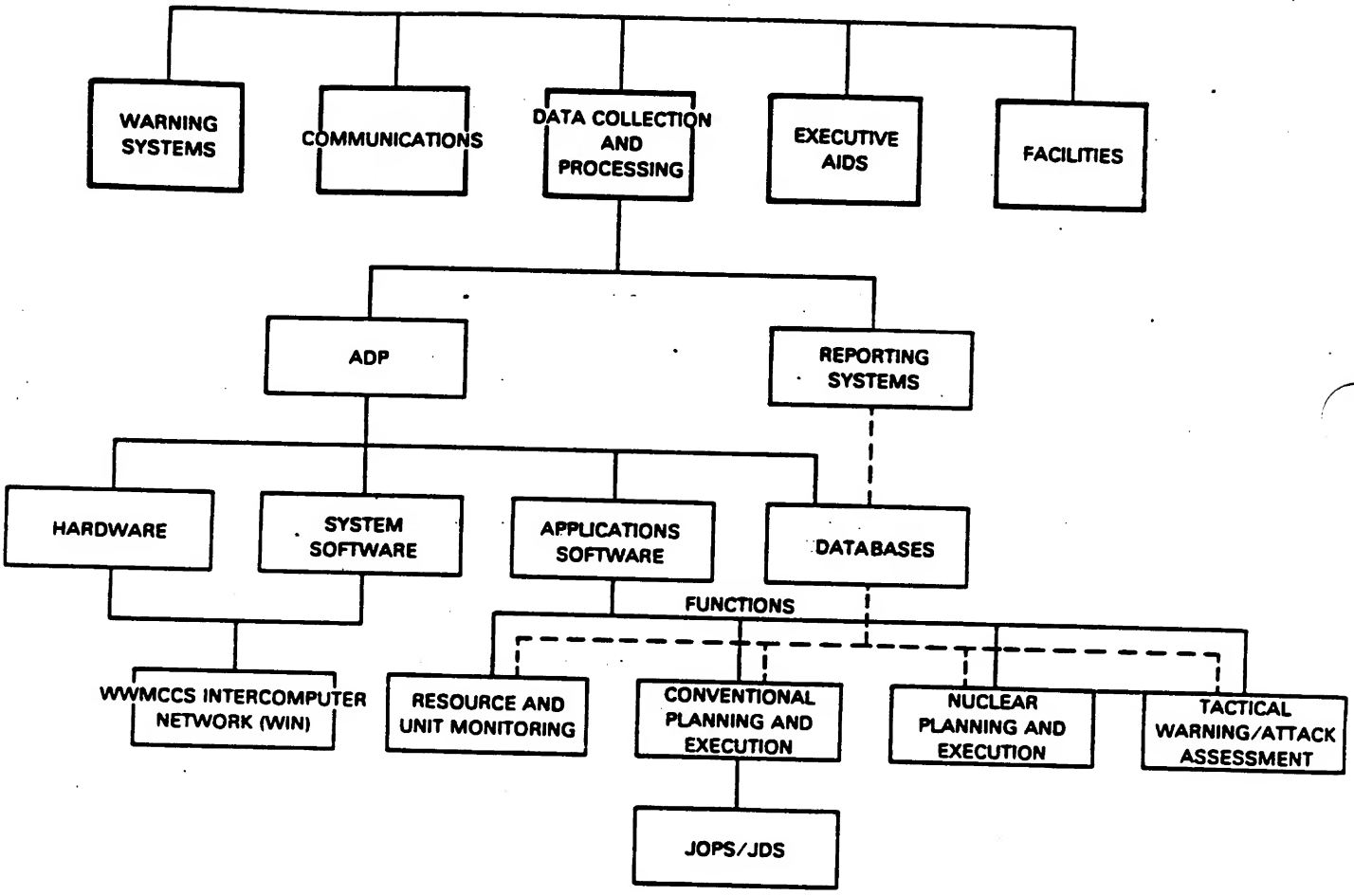

(b) The goal of WWMCCS is to assure effective connectivity among the National Command Authority, Joint Chiefs of Staff, and other components of the National Military Command System down to the Service component commanders. The system furnishes a multipath channel of secure communications to transmit information from primary sources to those who must make decisions and to transmit their decisions to subordinates. WWMCCS is not a single system, but a system of systems, ranging from national to theater level. The primary mission of the systems designed, developed, procured, and employed to satisfy the command and control requirements of the Services or using commands is to support the national-level command and control function.

(c) Conceptually, there are five basic elements of WWMCCS. They are warning systems, communications, data collection and processing, executive aids, and facilities. The operation of the WWMCCS together forms a worldwide information system that interfaces with other non-WWMCCS systems.

(2) Modern Aids to Planning Program (MAPP). The MAPP is a CJCS initiative to assist the CINCs in their warplanning process through use of modern analysis tools. MAPP also affects the Joint Staff. J-8 is developing MAPP prototype models for the CINCs. These models will provide some of the simulation and analysis decision support tools required for JOPES. The MAPP VAX system provides automated tools to help the CINCs improve warplanning and force employment through a suite of software packages. These software packages include analytic models for simulations and wargaming such as the Joint Theatre Level Simulation (JTLS) and the State-of-the-Art Contingency Analysis (SOTACA). The Joint Staff portion of the MAPP topology is depicted in Figure 4.

(3) Pentagon Telecommunications Center System (PTCS). The PTCS is a message handling system managed by the Army and used to provide General Service (GENSER) record communication services and messages with classifications through Top Secret for any of its DoD subscribers in the Washington D.C. area. PTCS, through the AUTODIN, enables subscribers to communicate with DoD and other organizations throughout the world. By operating with the PTCS and its alternate site at Fort

Figure 4

THE JOINT STAFF PORTIONS OF THE
MODERN AIDS TO PLANNING PROGRAM (MAPP)

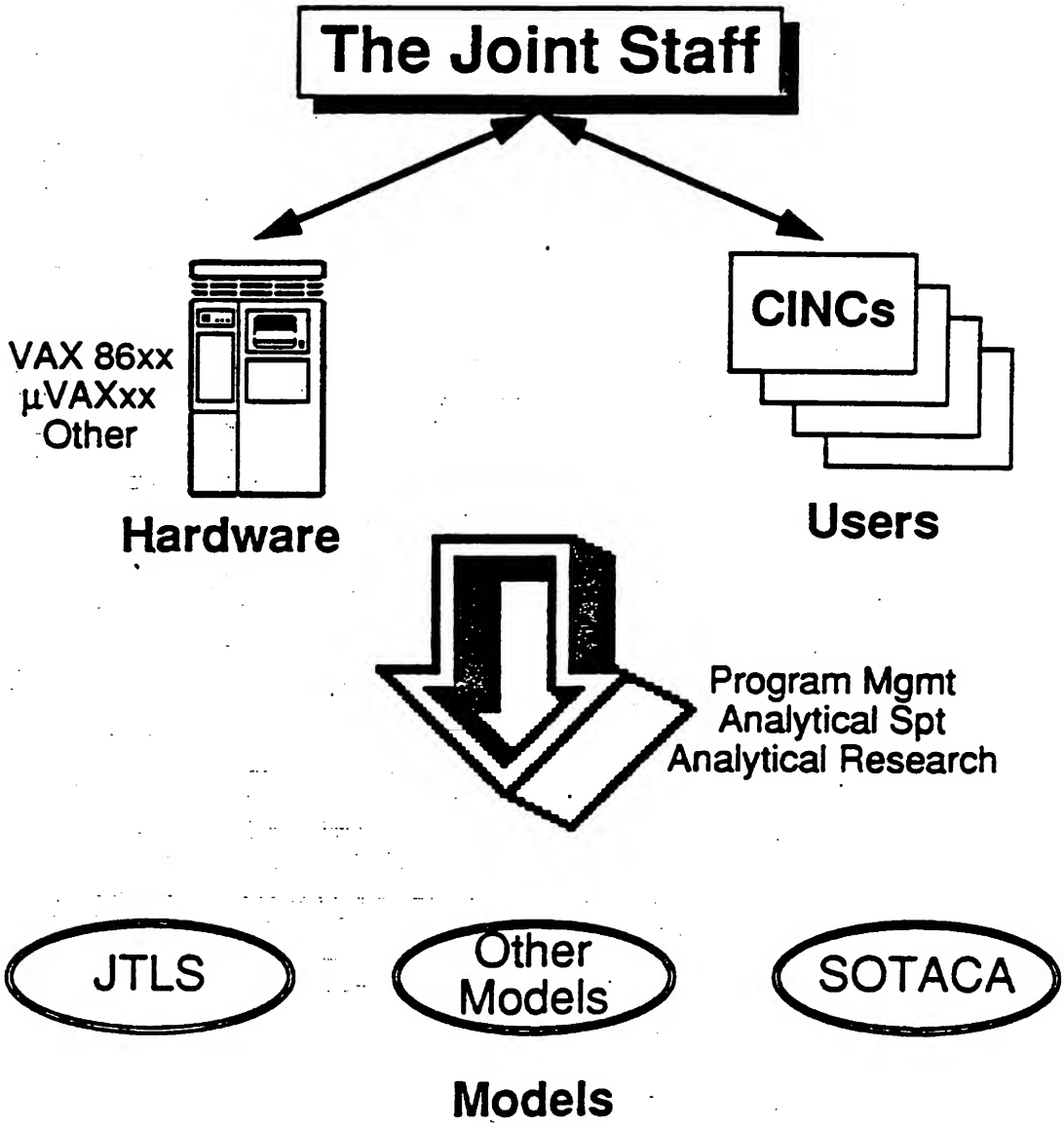

Ritchie (Site R), the JCS Information Services Center (JCSISC) provides AUTODIN message service to the Joint Chiefs of Staff, the Joint Staff, the Office of the Secretary of Defense, and the Defense Intelligence Agency. The Joint Staff automated message handling and portable computer links to the PTCS is depicted in Figure 5.

(4) Joint Information Management System (JIMS). JIMS provides general management information system staff support capabilities for the Joint Staff. It is the result of several years' effort by the Joint Staff to internally develop, fund, and manage an integrated IT system that supports the information-processing needs of the Joint Staff. The JIMS currently consists of the Joint Staff Support Information System (JSSIS), the Document Storage and Retrieval System (DS&RS), the JCS Information Service Center (JCSISC), the Joint Administrative Support Information System (JASIS), the TEMPEST Portable Computer (TPC), the Joint Staff Support Information Network (JSSIN), and the Corporate Data Base. The JIMS topology is described in Figure 6.

(a) JIMS Component Systems. The JIMS component systems are currently characterized as a "system of systems." In essence, JIMS has evolved over time to encompass its components by new systems being added to the Wang local area network backbone as they have been developed. However, the proprietary nature of the LAN has limited connectivity. As a result, Figure 6 reflects disconnects between JIMS component systems. The future direction of JIMS, discussed below, through the adoption of standard communications, hardware, software and interfaces will bind the JIMS components more closely together and bring the Joint Staff office automation components together.

1 Joint Administrative Support Information System (JASIS). The JASIS Datapoint network is a distributed system providing support to various Joint Staff offices, specifically those in the Services and Security Divisions of the DIRM. JASIS will be phased out during FY89 and replaced by the new Joint Staff Access Control System.

Figure 5

THE JOINT STAFF PORTION OF THE PENTAGON TELECOMMUNICATIONS SYSTEM

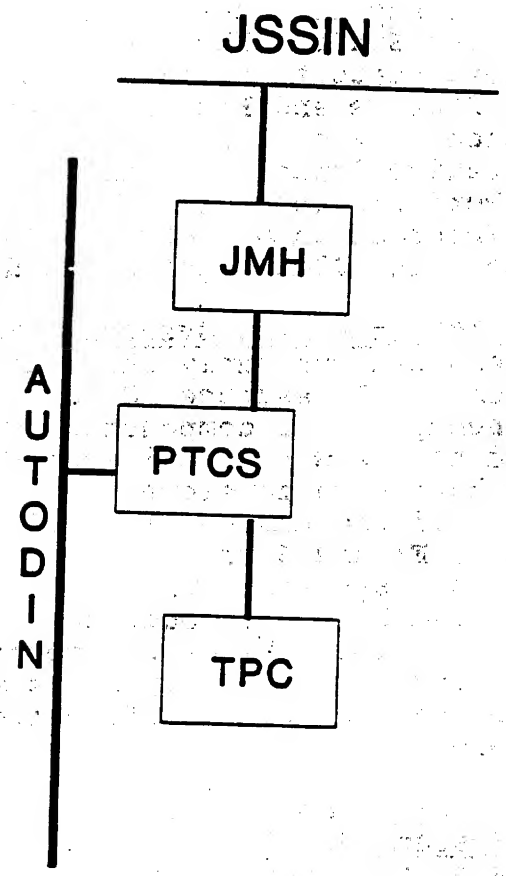

Figure 6

THE JOINT INFORMATION MANAGEMENT SYSTEM (JIMS)

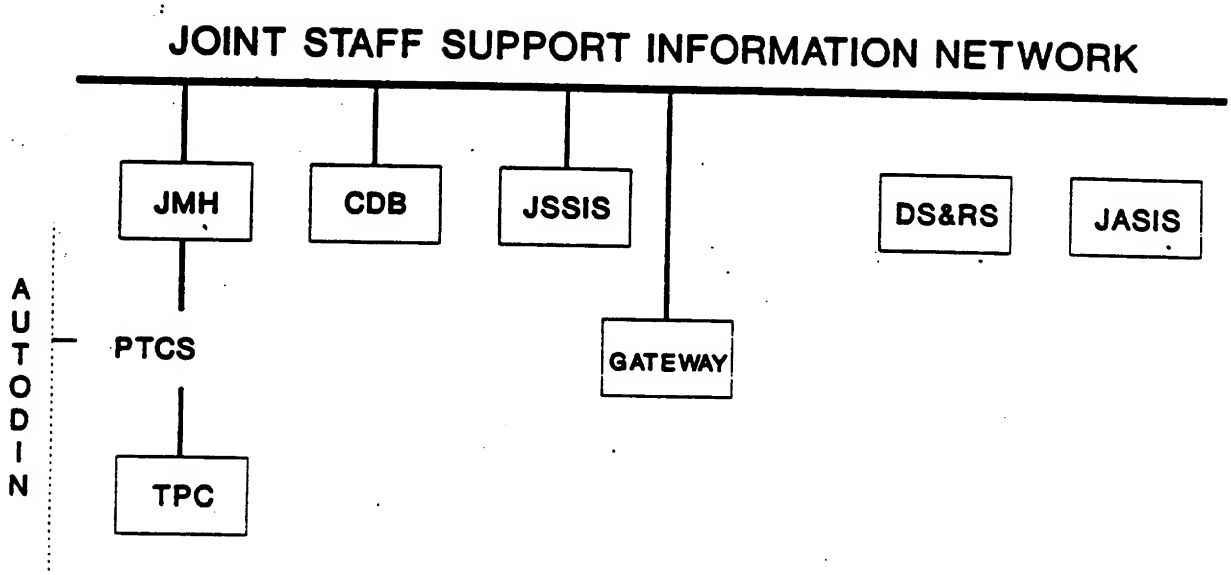

2 Joint Staff Support Information System (JSSIS). JSSIS provides distributed automation support for managers, action officers, and administrative personnel. The system contributes significantly to reducing administrative burdens on action officers, permitting them to spend more time on their substantive functions and improve productivity through access to state-of-the-art tools. JSSIS capabilities include word processing, graphics, decision support (spread sheets), data base management, scheduling, and custom software development. The system is NACSIM 5000.4 compliant and is operated in the system high mode at the TOP SECRET level. JSSIS is based on the Wang VS85T, configured in clusters normally consisting of 24 to 55 intelligent workstations networked to the CPU with three to four 288MB disk drives and associated printers. Forty-one (41) clusters are programmed for installation in the Joint Staff, with completion of the installation projected in 1989.

3 Joint Staff Support Information Network (JSSIN). JSSIS clusters continue to be installed throughout the Joint Staff in order to provide automation capabilities to the entire Joint Staff. The individual clusters are being interconnected through a WangNet FastLAN (LAN - Local Area Network) to expand the information exchange capabilities across the Joint Staff. These interconnected clusters comprise the JSSIN. FastLAN is a modular packaging of WangNet -- a broadband local area network product. This application utilizes the Wang Band services of WangNet to provide both interactive and batch communication between JSSIS clusters. This service provides high speed (10 Mbps) time-division multiplexed communications between JSSIS CPU's. JSSIS users can send and receive electronic mail utilizing the WIN in much the same manner as they send electronic mail--including memos, documents and messages--to other members of the Joint Staff.

4 TEMPEST Portable Computer (TPC). TPCs provide real-time automation and communications support to the Chairman of the Joint Staff, the

Secretary of Defense, and other senior officials during world-wide travel. The system is equipped to operate between remote locations and the JCSISC, either through a STU-II interface or via radio/satellite communications (UHF SATCOM links). The JCSISC installation includes an interface with the Pentagon Telecommunications Center which provides the OCJCS with the capability to forward critical message traffic to the Chairman anywhere in the world.

5 Joint Message Handling (JMH). JMH will satisfy a significant requirement of the JIMS to provide improved message handling to the Joint Staff using the JSSIN as the distribution mechanism. The JMH includes an interface from the JSSIN to the PTCS CCR (Computer Center Site R). With the JSSIN interfaced to the PTCS, the areas of incoming/outgoing message processing can be further automated than it is today by allowing the action officers to receive and send messages electronically using electronic mail features, thus speeding the delivery of messages to the end-users.

6 Corporate Data Base. To serve the need to house Joint Staff corporate-level data, a centralized corporate data base storage and retrieval capability was established in mid-FY87. This was the first phase of a four-phased approach to handling corporate-wide data bases. The first phase was designed to physically consolidate existing vertically-developed data bases into a single centralized computer. The second, and subsequent stages are outlined in the future corporate data base section later in this plan.

7 NMCC Interconnectivity. The NMCC Interconnectivity project provides the methodology and protocols for host-to-host interconnection between JSSIS equipment and specified external systems. The overall goal of NMCC Interconnectivity is to provide JSSIS users access to files residing in the NMCC host computer systems (e.g., WWMCCS, MAPP). The basic capabilities are bulk file transfer and remote job entry.

8 Document Storage and Retrieval System (DS&RS). DS&RS will support action officers in researching and retrieving JCS and Joint Staff papers. The system which will be replaced consists of paper files indexed on a remote computer; it requires large amounts of space to store paper files, human intervention to retrieve and maintain paper copies, and generates concerns for the accountability of copies. The new system, an integrated micrographics and computer system which operates as a computer-assisted retrieval (CAR) system, will eliminate these disadvantages and provide faster access to documents. The system provides for computer search of a document index with automated retrieval, viewing, and/or printing.

b. Planned Major Systems. Over the next five years, many changes will be occurring in the four major AISs serving the Joint Staff. In addition, two additional major systems will be added. The two new systems will be the Joint Chiefs of Staff Fusion Center and the Logistics Readiness Center. The links and relationships between these systems are depicted in Figure 7.

(1) WWMCCS Information Systems (WIS). The WIS program includes near-term enhancement of WWMCCS computers and facilities and provides for extensive, evolutionary modernization of the total system. An objective of WIS is to meet the operational command and control decision support requirements of national level elements supported by the NMCS (the priority component of WWMCCS) -- the President, Secretary of Defense, and the Chairman of the Joint Chiefs of Staff. This also supports the command and control functional responsibilities of the Joint Staff. Joint programs such as WIS have their main effect on Joint Staff IRM requirements through the requirements identified for the NMCS element of the WWMCCS. The scope and direction of the Joint Staff conponent of the WIS program are outlined in Appendix B to this strategic plan. (See pages B-5, B-6, B-8, B-11, B-22, and B-23.) The implementation methodology for WIS on the Joint Staff is documented in the Joint Staff WIS Program Implementation Plan and is depicted in Figure 8.

(a) Joint Operations Planning and Execution System (JOPES). JOPES is an integrated, conventional command and control system designed primarily to

Figure 7

FUTURE AUTOMATED INFORMATION SYSTEMS
SERVING THE JOINT STAFF

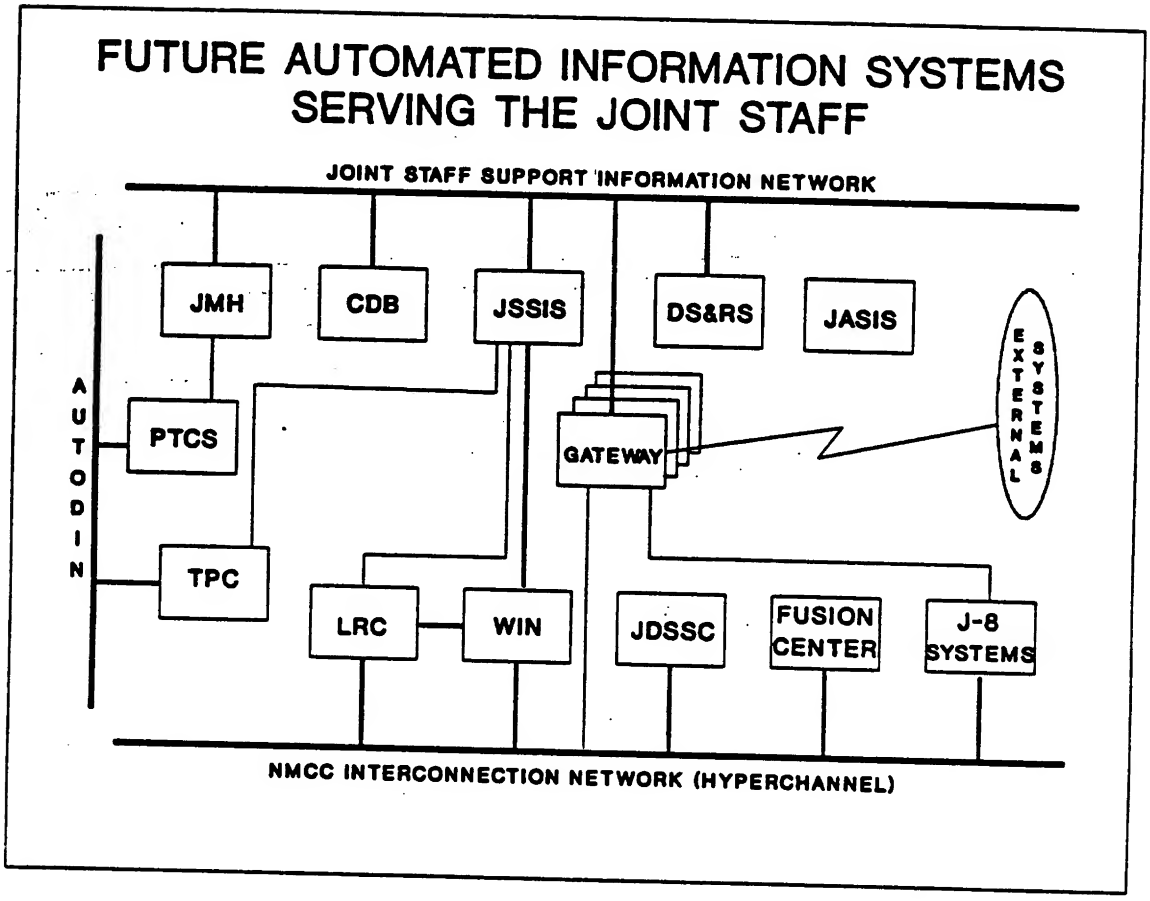

Figure 8

WIS FUTURE

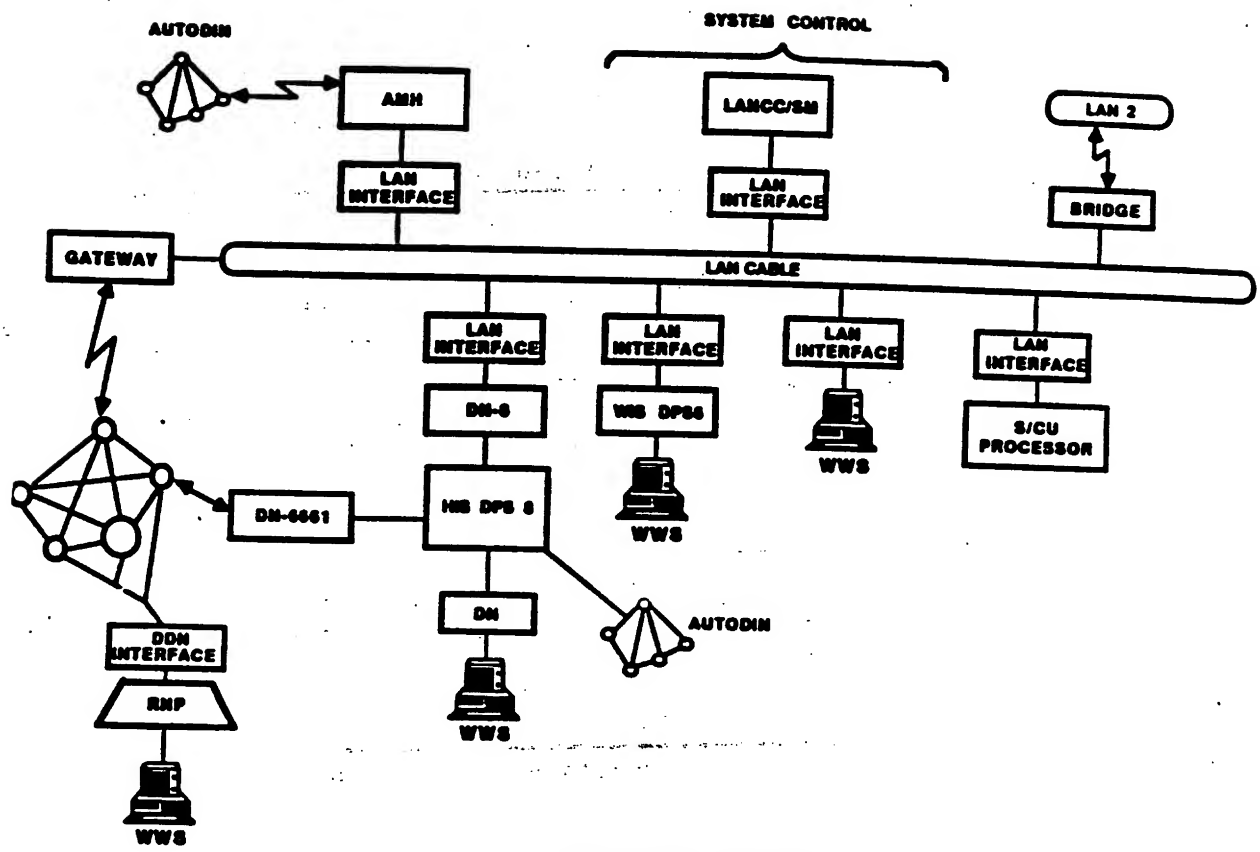

Block B Architecture

satisfy the information needs of senior-level decisionmakers in conducting joint planning and operations. The primary emphasis is on procedures, supported by modern ADP and communications systems, to replace the time-consuming components of current systems.

(b) WWMCCS Intercomputer Network (WIN). With access to the WIN, users can communicate with other users, review and update data at other WWMCCS locations, and transfer data accurately and rapidly between computers. These capabilities are particularly important to Joint Staff action officers during exercises and times of crisis. Action officers require access to WIN applications such as the following:

1 Telecommunications Network (TELNET). TELNET is used to establish access to computer resources of another, remote host in the WIN. The user can access a WWMCCS remote host computer site as if the terminal is directly connected at that site.

2 Teleconferencing (TLCF). TLCF permits interconnected WWMCCS sites to simultaneously confer, exchange textual information, and assist in command decisionmaking.

3 File Transfer Service (FTS). FTS is used to exchange messages or large volumes of data between hosts. For example, deployment data files or large segments of a data base can be exchanged between or among commands involved in deployments.

(2) Modern Aids to Planning Program. MAPP will continue to develop improved modeling capabilities including the implementation of operational interfaces to achieve interoperability of modern aids to planning capabilities with JOPES and other information processing and data base systems. Ultimately, the fully developed MAPP will integrate previously developed MAPP capabilities into the joint warplanning systems, which will become embedded in the WIS. The scope and direction of the Joint Staff component of the MAPP system are outlined in Appendix B to this strategic plan. (See page B-34.) The implementation methodology for MAPP on the Joint Staff is documented in the MAPP Terms of Reference SM #463-85 and is depicted in Figure 9.

Figure 9

MAPP FUTURE

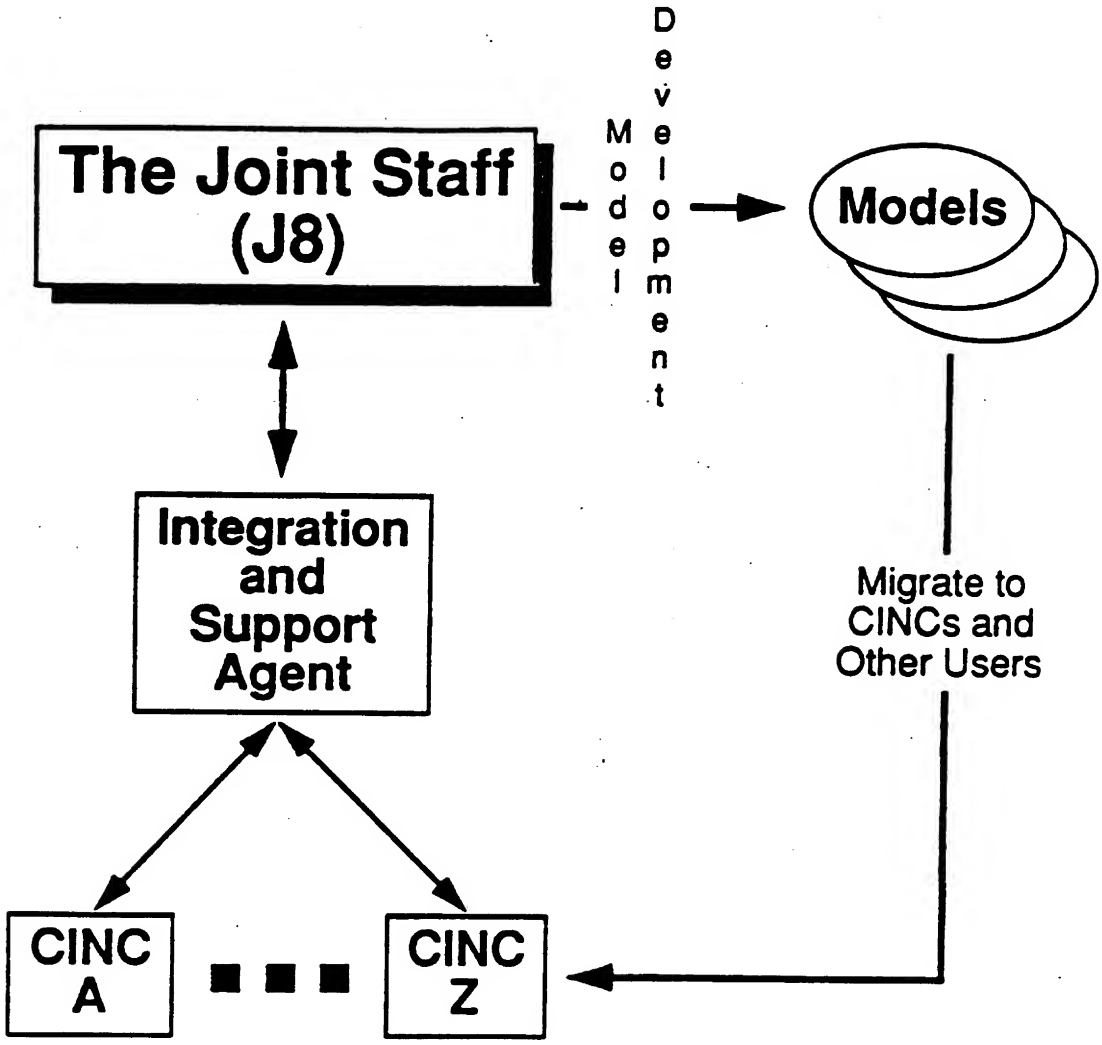

(3) Pentagon Telecommunications System. The PTCS will continue to provide AUTODIN message traffic to the Joint Staff, automatically through the Joint Message Handler. In addition, the AUTODIN feed to the PTCS will be tapped and routed to allow streamlined support to the traveling Joint Staff user. The future connection of the Joint Staff to the PTCS is depicted in Figure 10.

(4) Joint Information Management System (JIMS). The future direction of JIMS will emphasize greater integration between component systems and the creation of a single, seamless environment running under a certified, secure operating system with appropriate controls on user access to component systems and data bases which conform to the provisions of paragraph 2b(7) above. The future JIMS architecture is depicted in Figure 11.

(a) Joint Staff Access Control System (JSACS). (See Appendix B, page B-37.) This system controls physical access into the Joint Staff areas of the Pentagon through the guard posts. This system will replace the JASIS. The Instant Image Identification (I.I.I.) portion of JSACS will handle databasing requirements and will be coupled with the Rusco card reader system. The Intrusion Detection portion of JSACS will not be used for data processing.

(b) Joint Staff Support Information System (JSSIS). (See Appendix B, pages B-37, B-38, and B-44)

1 JSSIS workstations will be transitioned to a mix of TEMPESTed and non-TEMPESTed devices based upon the individual requirements of the projected user area.

2 More applications will be run at the PC-level with the cluster minicomputers being used mainly as file servers, communications controllers and security monitors. As PC power increases and communications and security roles can be assumed by the PCs, the PCs will move out from behind the clusters and be placed on the network directly. Thus the clusters will be used in a file server role and can be centralized or replaced with low end, division-level data base machines.

Figure 10

PTCS FUTURE

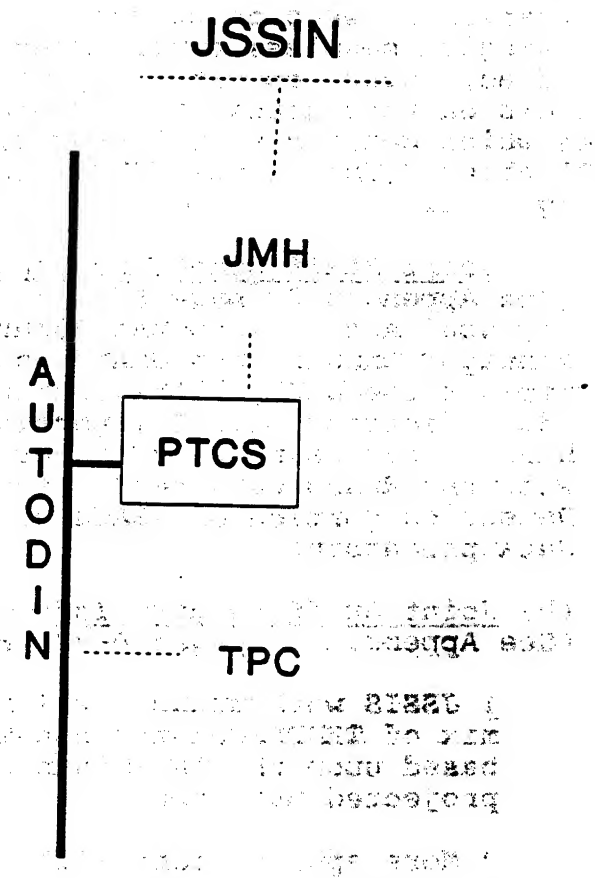

Figure 11

JIMS FUTURE

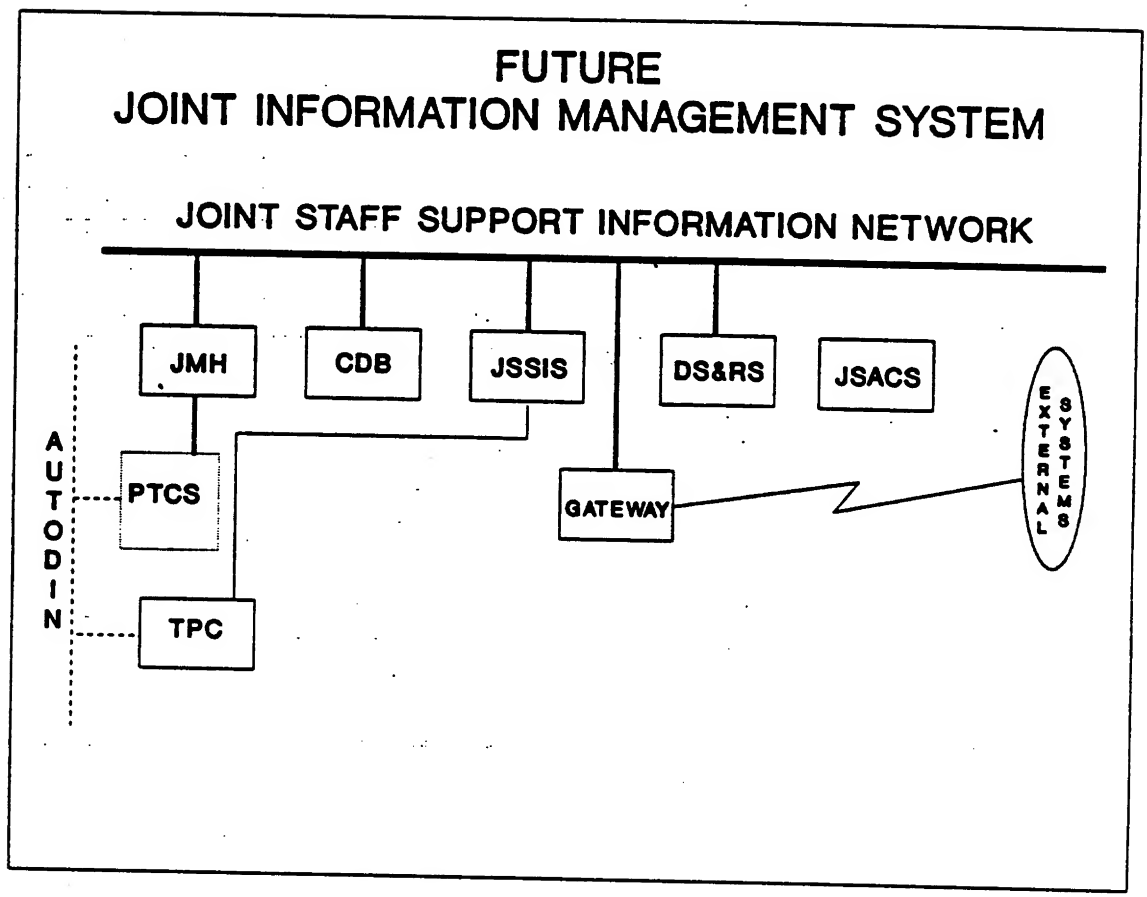

3 Joint Staff Support Information System (JSSIS) to WWMCCS Intercomputer Network (WIN) connectivity allows Joint Staff action officers to access the WIN from a JSSIS terminal via the Joint Staff Support Information Network (JSSIN). Both the WIN and JSSIS systems operate at the TOP SECRET level. By selecting from a list of possible JSSIS applications, the authorized WIN user is able to access a local WIN host computer, log on, and perform activities similar to any other user not utilizing a JSSIS terminal. Further, connectivity from JSSIS to WIN allows a user to use installed JSSIS equipment to access the WIN as required to support crisis management activities as well as normal, day-to-day automated requirements. JSSIS to WIN connectivity for the Joint Staff results in realization of the "one man, one workstation" concept for individual Joint Staff action officers.

(c) Joint Staff Support Information Network (JSSIN). (See Appendix B, pages B-17 and B-39.)

1 Network Conversion. The JSSIN will be enhanced to provide an industry-standard protocol suite in order to better satisfy the multi-vendor interoperability requirement of the JIMS system and other systems being added to the JSSIN backbone. This LAN will utilize the IEEE 802.3 standard and the DoD protocols (TCP/IP) prior to the availability of GOSIP standard-compliant systems. The implementation of these protocols could utilize the existing network cable plant and, with the addition of the IEEE 802.3 media access units, many of the current components could continue to be used as well.

2 WWMCCS (WIN) Interconnectivity. Connectivity of the JSSIN to WIN will be expanded to allow greater communication between individuals on the Joint Staff and WIN users worldwide, principally at the specified and unified command headquarters. Appropriate JSSIS clusters will be directly connected to the WWMCCS mainframe computers, resulting in the capability to emmulate a WWMCCS terminal and allow JSSIS users to use their JSSIS terminal instead of WWMCCS terminals.

3 Network Management Center. As the scope of JIMS interconnectivity broadens, the activities and tasks needed to manage the associated network increase. Initially some of these tasks are performed manually by personnel in the JCSISC, by the JSSIS cluster administrators, and by the staff involved in the installation and maintenance. As the JSSIN grows and is used by more JIMS components and other systems as a communications backbone, the current, various manual network management systems will be replaced by more automated systems which contain appropriate security controls on user access to component systems and data bases that conform to the provisions of paragraph 2b(7) above. These will include traffic flow analyzers, component failure indicators, a graphical network manager console, and a network exerciser. NMC functions will include network management, network security monitoring, and gateways to external systems.

(d) TEMPEST Portable Computer (TPC). (See Appendix B, page B-37.) The TPC program will continue to support the administrative communications requirements of the Secretary of Defense and the Chairman of the Joint Chiefs of Staff while they are away from the Pentagon. The program will incorporate the newest proven technology in small, light weight TEMPEST computers, encryption devices, and communication technology. In addition, the program will support the requirements of traveling Joint Staff members. Besides continuing to support stand alone computer needs and point-to-point data communications needs, the program may support remote log-on capability to JSSIS in the future. The goal of the program is to continue to meet the remote computer needs of the personnel it supports.

(e) Joint Message Handler (JMH). (See Appendix B, page B-39.) JMH will be expanded to include outgoing messages. Future potential capabilites for JMH include a message data base and retrieval capability which will allow historical message management.

(f) Corporate Data Base System (CDBS). (See Appendix B, page B-40.) The CDBS will be enhanced and expanded to improve access and processing speed while providing greater storage capacity in response to growing Joint Staff corporate data

requirements. Specifically, the second phase of the CDBS project (FY 89) will enhance the storage and processing capacity of the corporate data base system to match anticipated growth in user demand for data base processing. The third phase (FY89-90) will implement standard access and query protocols which contain or use software capable of discriminating among user/requesters and limiting access to those data elements in the corporate data base the user/requester has authority to view. Upon successful completion of phase three, the fourth phase (FY91-93) will integrate the corporate level into a LAN architecture for distributed data base storage.

(g) Document Storage and Retrieval System (DS&RS). (See Appendix B, page B-46.) The DS&RS which operates in a standalone mode will be networked thorough JSSIN when software is developed that will discriminate among users/requesters and limit access to the data elements within the DS&RS data base the particular user/requester has authority to view. An effort to develop the appropriate software will be undertaken in FY 89-90. It is essential to the establishment of connectivity because virtually all documents and information in the data base are controlled by the provisions of MOP 39.

(h) Integrated Graphics & Publishing (IGAP). (See Appendix B, page B-37.) The IGAP system will be interfaced with the JSSIN and provide action officers with the ability to prepare word processing documents for incorporation in IGAP publications.

(5) External Connectivity. (See Appendix B, page B-39.) The overall goal of external connectivity for the Joint Staff is to provide both communications connectivity and data interoperability. Key strategic communications connectivity directions are to enhance connectivity between the WWMCSS Intercomputer Network and JSSIS, AUTODIN and JSSIS, and the HyperChannel Network in JDSSC. Currently, functional communications connections exist and are being utilized by the Joint Staff. The functionality of each of these connections will continue to be enhanced. This provides immediate benefits to communicate with the Joint Commands and other DoD organizations. Communications connectivity

directions also include establishing connectivity with OSD, the State Department and other agencies of the Federal Government. Emphasis at the application level is on establishing standard electronic mail, document and file exchange. The strategic objective of communications connectivity and data interoperability is to promote the effective and efficient coordination of the Joint Staff and external organizations by providing fast and seamless exchange of information subject to appropriate controls on user access to component systems and data bases which conform to the provisions of paragraph 2b(7).

(6) National Military Command Center (NMCC) Fusion Center. The Fusion Center satisfies the NMCC requirement to display worldwide locational data of military forces, including friend, foe, and neutral, and provides support to the Director of Operations, the Chairman, and the NCA. The Fusion Center requires interfaces to Service data bases and the National Military Intelligence Center data bases. Further, the Fusion Center supports the development of new data base techniques to allow input of the additional data into the data base and the development of specific decision functions to be performed by the NMCC analysts with the data. The scope and direction of the Joint Staff Fusion Center are outlined in Appendix B to this strategic plan. (See page B-21) The implementation methodology for the center is classified above the level of this plan.

(6) Logistics Readiness Center (LRC). The LRC will provide a state of the art computer capability to plan, monitor, and execute JCS actions, along with allowing the Joint Transportation Board to analyze air and sea flow to determine the most effective and efficient allocation of transportation assets. The LRC will provide an interactive hardware and software suite of intelligent workstations, providing color graphics, message handling, and large data manipulation. The scope and direction of the Joint Staff Logistics Readiness Center are outlined in Appendix B to this strategic plan. (See page B-16.) The implementation methodology for the center is documented in the Joint Staff Logistics Readiness Center Program Implementation Plan and is depicted in Figure 12.

Figure 12

LRC FUTURE

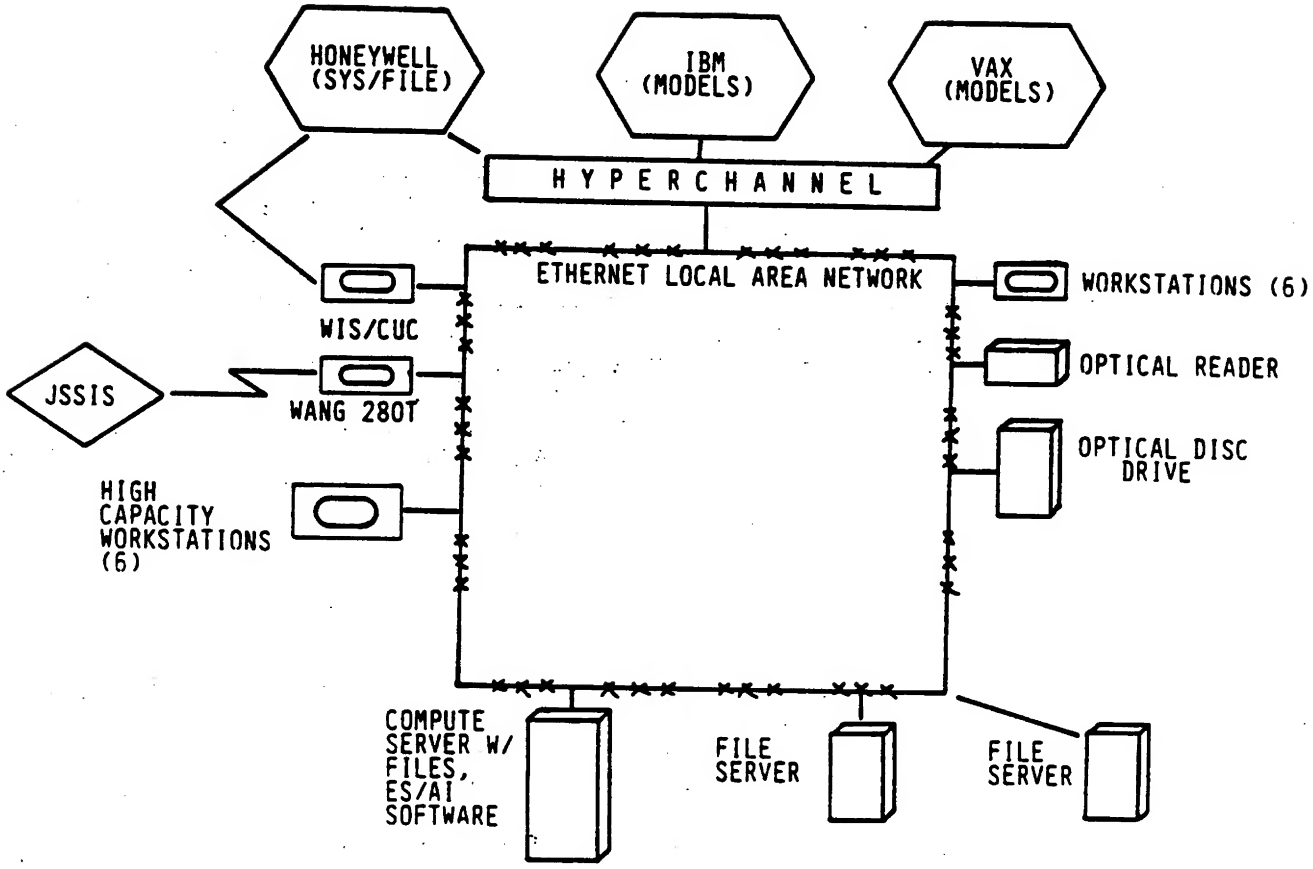

APPENDIX A

(Extracted from Section III of the Joint Staff Information Management Plan dated 31 August 1988 except as [indicated].)

GOALS AND OBJECTIVES

1. Joint Staff IRM Goals and Objectives. The ultimate goal of the Joint Staff IRM Program is to enhance the capability of Joint Staff personnel to do their jobs accurately, quickly, and efficiently. IRM goals describe what the Joint Staff must do to develop the organizational environment and tools needed to meet mission essential information requirements. Several objectives have been developed to meet each goal. The following specific goals and objectives guide Joint Staff IRM efforts:

a. Goal 88-1. Promote effective use of information resources for mission accomplishment by providing appropriate tools for Joint Staff [and CINC modeling, analysis and] decision support.

(1) Objective 88-1a. Refine the [current] architecture using standard hardware and software solutions.

(2) Objective 88-1b. Develop a plan for transitioning present IT systems to the new environment.

(3) Objective 88-1c. Regularly review existing systems and capabilities for potential technology infusion (i.e. look for opportunities to incorporate new technology into existing systems).

b. Goal 88-2. Improve accountability, security, and management of Joint Staff information resources.

(1) Objective 88-2a. Improve visibility of costs associated with specific Joint Staff IRM projects.

(2) Objective 88-2b. Fund IRM requirements through the Joint Staff POM to the maximum possible extent.

c. Goal 88-3. Improve management of Joint Staff information by planning for immediate and long-term information needs.

(1) Objective 88-3a. Describe all information needed to support the Joint Staff mission, and identify the sources and Joint Staff users of the information.

(2) Objective 88-3b. Ensure accuracy and integrity of Joint Staff data.

(3) Objective 88-3c. Improve control of Joint Staff information in automated systems.

d. Goal 88-4. Improve access to the Joint Staff information base by eliminating unnecessary differences in and between automated and non-automated systems and by making the information base easier to use through improved design and training.

(1) Objective 88-4a. Establish a corporate data base with an appropriate level of data redundancy.

(2) Objective 88-4b. Evolve towards open systems.

(3) Objective 88-4c. Ensure that access to the Joint Staff information base is controlled in accordance with the provisions of JCS MOP 39 and the special requirements of the data owners.

(4) Objective 88-4d. Identify and promote common solutions by adopting standard hardware and software.

e. Goal 88-5. Improve the quality of the Joint Staff information base by facilitating uniformity and sharing of essential data through standardizing data elements and terms whenever feasible.

(1) Objective 88-5a. Identify needs for shared data.

(2) Objective 88-5b. Establish a data acquisition, use, and management program.

(3) Objective 88-5c. Integrate records and data management.

f. Goal 88-6. Improve productivity of Joint Staff personnel by efficiently procuring and effectively using automatic data processing, telecommunications, and office automation equipment.

(1) Objective 88-6a. Evolve to a distributed processing base without shifting system administration to the users.

(2) Objective 88-6b. Implement, as far as practical, a "single terminal" concept that integrates the most capable and effective systems into a single support architecture.

(3) Objective 88-6c. Establish a single interconnectivity strategy for all Joint Staff automated information systems.

(4) Objective 88-6d. Assess the manpower impacts before approving IRM projects. Due to the congressionally mandated manpower ceiling, the Joint Staff must accomodate automated information systems within existing manpower resources. It is essential that IRM projects not generate manpower requirements beyond the current ceiling without the identification and approval of tradeoff manpower by the affected directorates.

g. Goal 88-7. Promote Joint Staff awareness of benefits and constraints associated with use of automated information systems.

(1) Objective 88-7a. Establish an automated information system user literacy program.

(2) Objective 88-7b. Establish a computer security awareness program.

APPENDIX B

PROJECTS IN SUPPORT OF GOALS AND OBJECTIVES

J-1

MANPOWER MANAGEMENT

DIRECTORATE: J-1

IRM GOALS AND OBJECTIVES: 88-2b, 88-3b, 88-3c, 88-5a, 88-5b

JRP DESCRIPTION: The Joint Manpower Management Data System (JMDS) automates the authorization documents for all United States Joint activities and the United States authorizations in International Commands (NATO), and tracks over 20,000 billets assigned to joint activities. JMDS maintains the data contained on all Joint Manpower Program (JMP) documents and the Peacetime Establishment (PE) of the NATO commands. The system is also used to develop and update the Joint Duty Assignment list (containing over 8,500 billets) mandated by the 1986 DoD Reorganization Act.

JRP JUSTIFICATION: JMDS funding is required for system maintenance which includes query refinement/enhancement, software assistance and debugging, report generation and reformatory, and data upload and validation. The automation of the manpower tracking process allows manpower changes/requests to be handled efficiently and expeditiously, and enables the Joint Staff (and other joint activities) to make real-time responses to complex manpower issues.

SUBELEMENTS:

- Joint Manpower Management Data Systems

JOINT DUTY ASSIGNMENT MANAGEMENT INFORMATION SYSTEM

DIRECTORATE: J-1

IRM GOALS AND OBJECTIVES: 88-2b, 88-3b, 88-3c, 88-5a, 88-5b

JRP DESCRIPTION: The Joint Duty Assignment Management Information System (JDAMIS) was created by the Office of the Secretary of Defense (OSD) to facilitate the tracking of officers who have been or are assigned to a joint duty billet. This tracking is required by Title IV of the Goldwater-Nichols DoD Reorganization Act of 1986. J-1, Office of Joint Manpower and Personnel Data Management (OJMPDM), manages the database which resides in an IBM 4381 located at the Defense Manpower Data Center (DMDC) in Rosslyn, VA. The majority of DMDC's operating funding for JDAMIS is provided by OSD. The Joint Staff's funding support will be limited to administrative expenses such as a user's guide and a programmer's manual. JDAMIS has been created to facilitate the tracking of officers assigned to positions on the Joint Duty Assignment List or officers holding the joint specialty officer designation. Such officers must be tracked from their joint duty assignment through promotion cycles and all future assignments.

JRP JUSTIFICATION: Title IV of the Goldwater-Nichols DoD Reorganization Act of 1986 requires the Secretary of Defense to take such action as necessary to enhance the capabilities of the Joint Staff so it can-"monitor the promotions and career assignments of officers with the joint specialty and of other officers who have served in joint duty assignments; and otherwise advise the Chairman on joint personnel matters." JDAMIS funding is required to maintain the administrative expense (user's guide, programmer's manual, etc.) of the data base for the use of all the joint activities (CINCs, joint activities/commands). OSD is funding the development and operation of JDAMIS through its support of DMDC. The 1986 Goldwater-Nichols DoD Reorganization Act requires the reporting and tracking of officers for the balance of their careers to monitor their promotion performance and subsequent assignments. This is a requirement beyond the ability of the Service personnel systems to accommodate. It can reasonably be anticipated that numerous requests for information handled by this system will be made by the Services and Congress/GAO/CRS.

SUBELEMENTS:

- Joint Duty Assignment Management Information System

NUCLEAR OPERATIONS SYSTEMS SUPPORT

DIRECTORATE: J-3

IRM GOALS AND OBJECTIVES: 88-1b, 88-1c, 88-2a, 88-2b, 88-3a, 88-3b, 88-3c.

JRP DESCRIPTION: This JRP includes hardware and software support for the Nuclear Planning and Execution System (NPES) and contract studies support for the Operational Test and Evaluation (OT&E) of strategic missiles. The NPES is the system used to provide near real-time nuclear information management in support of decisionmaking by the President, Secretary of Defense, Chairman, Joint Chiefs of Staff, and the commanders of nuclear capable unified and specified commands. In addition to nuclear information management, NPES also provides users with a full nuclear planning capability. This worldwide system of hardware, software, and procedures is under the configuration control of the Joint Staff, J-3. It includes fixed site and ground/air mobile capabilities, including support to numerous special access programs. The OT&E of strategic missiles is a contractor study program that monitors, reviews, and assesses CINC strategic missile OT&E and supplemental test programs. The Joint Staff uses this program to insure that these strategic systems maintain the accuracy and reliability required to support the Single Integrated Operational Plan (SIOP).

JRP JUSTIFICATION: The NPES is the only system of its kind. It provides a worldwide nuclear information management, planning, and decisionmaking capability to our most senior national-level military and civilian leadership. To continue to be a viable system, NPES must respond to annual SIOP revisions, changes in nuclear policy/guidance, nuclear weapon and delivery system modernization, and changes in operating and database management systems. And finally, as any information management system matures, user directed changes are required to make the man-machine interaction more efficient and productive. To these ends, the NPES community has mapped out a careful strategy of continual modernization into the mid to late 1990's. One of the advantages of NPES is that it uses state-of-the-art commercial operating systems, relational databases, and language compilers. Since the civilian community upgrades these systems annually, NPES must be budgeted to purchase these upgrades to remain viable. NPES is heavily tied to the Joint Reporting System (JRS). The reports within the JRS are used to update many of the interactive databases used by battlestaff members and senior

decisionmakers. These reports undergo annual revision, and the NPES software logic must be revised accordingly. Tied very closely to the JRS processing is the Message Generator. This hardware and software system emulates portions of the JRS and has provided the message traffic baseline for numerous exercises. Maintaining currency for this system is essential to the effectiveness of JCS and national level exercises. Communications are an extremely important portion of the NPES. NPES is presently limited to receipt of AUTODIN traffic, but work is underway to allow connection to more survivable means of communications. This effort includes the development of 2-way interfaces to enable message transmission, as well as receipt. Assessment of remaining US resources after a nuclear exchange is an area of increasing concern to our senior decisionmakers. Of particular interest is the potential for military support to civil defense. NPES now has the beginnings of a residual capabilities assessment system, but needs to expand greatly to attain the goals set by our civilian leaders. Of equal interest to our civilian and military leaders is the capability to determine the residual and emerging threat of the enemy after a nuclear exchange. NPES has a rudimentary capability in this area, but it must be expanded greatly to meet the requirements of our leaders. The Nuclear Weapons Accounting (NUCWA) functions of NPES are currently being reviewed in a DNA sponsored study. When the study is completed, major changes will be required in the NPES NUCWA software. To maintain a viable system, NPES hardware replacement is programmed for the 1992-94 time frame. DCA is responsible for the fixed site hardware funding, while Air Force is responsible for the Airborne Command Post hardware. The strategic missile OT&E study program is the only independent means available to the Joint Staff to adequately evaluate CINC OT&E programs and the accuracy/validity of strategic missile SIOP planning factors.

SUBELEMENTS:

- Code Word 1,2, & 3
- Nuclear Planning and Execution System (NPES)
- Nuclear Planning System (NPS)
- Transportable and Mobile NPES (TAM NPES)
- Nuclear Weapons Accounting System (NUCWA)
- OT&E of Strategic Missiles

CONVENTIONAL OPERATIONS SYSTEMS SUPPORT

DIRECTORATE: J-3

IRM GOALS AND OBJECTIVES: 88-1b, 88-1c, 88-2a, 88-2b, 88-3a, 88-3b, 88-3c.

JRP DESCRIPTION: This JRP includes ADP activities in the design, development, and operation of conventional command and control capabilities. This includes the support for the Conventional Support System (CSS) which provides the ability to monitor status and location of forces and plan for post-SIOP conventional operations during redirection and reconstitution. It supports the Joint Reconnaissance Center (JRC) and NCA in the planning, scheduling, and monitoring the national reconnaissance assets. It also includes the support for WWMCCS standard ADP systems that provide environmental data to the NCA, the JCS, U&S Commands, and Services; plus, provides ADP software, reference files, and related procedures to support command and control monitoring of the disposition and status of U.S. forces worldwide.

JRP JUSTIFICATION: CSS allows selected NMCS command centers to provide sufficient information through the JCS, to assist the NCA to exercise their responsibilities for directing conventional military operations and to plan additional operations based on the enemy's residual threat and the U.S. capability to attack the threat. ADP support for the JRC provides automated support for JRC personnel 24-hours a day, automating receipt and dissemination of reconnaissance data worldwide. The programs are also used by the unified CINC's JRCs to manage the geographical recon programs in their respective AORs. Computer tapes are also provided to NSA and DIA. The Status of Resources and Training System (SORTS), and the supporting software and reference files under Resource Monitoring System (RMS) provide the NMCS, in conjunction with the CINCs and Services, authoritative information on the identity, status and location of the combat, combat support and combat service support units of U.S. forces. SORTS data is used by planners for sourcing the OPLANS for the U&S Commands.

SUBELEMENTS:

- WWMCCS Environmental Support System (WESS)
- Joint Reconnaissance Information System (JRIS)
- Pre-Edit Processor/Report and Message Processor (PREP/RAMP)
- Resource Monitoring System (RMS)
- Conventional Support System (CSS)

NMCS OPERATIONS SYSTEMS SUPPORT

DIRECTORATE: J-3

IRM GOALS AND OBJECTIVES: 88-1b, 88-1c, 88-2a, 88-2b, 88-3a, 88-3b, 88-3c.

JRP DESCRIPTION: This JRP provides: (1) Systems operations and hardware maintenance/modification support for the National Military Command Center Automatic Message Handling System. (2) Data processing support to planners and operators involved in managing day-to-day crisis and exercises. (3) Planning, integration, and implementation of the WWMCCS Information System (WIS), Joint Operations Planning and Execution System (JOPES), and the JSSIS. (4) Continuation of an evolutionary program providing major command and control information systems upgrades for the NMCS/Joint Staff over the next eight years.

JRP JUSTIFICATION: Increased reaction times and loss of NMCC watch team/crisis-response cell effectiveness due the lack of automatic message handling is unacceptable in terms of response to senior decisionmakers. The requirement for twenty-four hour computer operations and on-site hardware maintenance support remains.

Acceptable NMCC and ANMCC watch team/crisis-response cell reaction to crisis action situations is contingent on the quality of operational, administrative, data base management, WIN, and systems maintenance support provided by the Current Operations Planning System.

NMCS automated capabilities will continue to require transition to new and enhanced systems. Comprehensive management of the transition process is necessary to ensure uninterrupted support to the NMCS and an optimum level of system integration.

Supports the Operations Directorate responsibility for technical analysis, design, development, implementation, and program management of NMCS supporting information systems.

SUBELEMENTS:

- NMCS Processing and Display System (NPDS)
- NMCS Information and Display System (NIDS)
- Current Operations Planning System (COPS)
- NMCS Automated Support System (NASS)
- Information System Engineering & Mgt Services

PSYCHOLOGICAL OPERATIONS SYSTEMS SUPPORT

DIRECTORATE: J-3

IRM GOALS AND OBJECTIVES: 88-1b, 88-1c, 88-2a, 88-2b, 88-3a, 88-3b, 88-3c.

JRP DESCRIPTION: The Psychological Operations Systems Support requirement package provides a modern, computerized information handling system specifically dedicated to support worldwide Department of Defense psychological operations. By expeditiously providing a myriad of information such as psychologically relevant intelligence, country-specific base data, demographic information and foreign media content analysis this requirement performs a unique support function by providing intelligence/information needed for the planning, implementation and evaluation of PSYOP programs.

JRP JUSTIFICATION: The information required to conduct successful Psychological Operations ranges from scholarly studies to demographic data to intelligence reports to current news stories. To effectively and expedite utilize this vast amount of information in the development of viable PSYOP programs a dedicated management information system had to be developed.. This system provides a unique source of data on the perceptions, motivations and psychological vulnerabilities of potential target audiences worldwide that would otherwise be unavailable. Funding for this JRP represents continuation of a mission directed by national command policy and guidance.

SUBELEMENTS:

- Psychological Operations Automated System (POAS)

LOGISTICS RESOURCES SYSTEMS

DIRECTORATE: J-4

IRM GOALS AND OBJECTIVES: 88-2a, 88-2b, 88-3a, 88-3b, 88-3c, 88-5a

JRP DESCRIPTION: This JRP encompasses a series of systems designed to track and identify the resource levels for critical sustainability related materiel and assets including Civil Engineering Support, Munitions, POL, and Host Nation Support. These systems are being developed to support the CINCs and the JCS in the management of materiel worldwide in peacetime and in crisis.

JRP JUSTIFICATION: In total, the development and/or enhancement of the subelements of this JRP provide for the capability to monitor worldwide logistic resource levels, and more accurately measure the status of our sustainability. Each of the subelements will benefit both the CINCs and the JCS, enhancing their ability to track and manage the key aspects of US forces sustainability. Some functional requirements definition analysis work has already been initiated to support the overall sustainment mission areas of JOPES. This JRP requires expeditious funding to support continued development (e.g., prototyping) to assist in the definition/refinement of user requirements. These efforts will provide direct benefits to the logistics community in the near term, and will provide the basis for the fielding of JOPES standard software under the WIS program.

SUBELEMENTS:

- Civil Engineering Support Plan Generator (CESPG)
- Wartime Host Nation Support Information Mgt System (WHNSIMS)
- Fuels Resource Analysis System (FRAS)
- Sustainability Measurement System (SMS)
- Ammunition Resources Analysis System (ARAS)
- Integration of Force Planning Concepts with Munitions
- Joint Wartime Construction Management System

LOGISTIC SYSTEMS ENGINEERING

DIRECTORATE: J-4

IRM GOALS AND OBJECTIVES: 88-1b, 88-1c, 88-2b, 88-3b, 88-3c

JRP DESCRIPTION: This JRP provides systems support designed to employ Enterprise Analysis Methodology and Supporting tools to establish and maintain a strategic systems master plan for the Logistics Directorate.

JRP JUSTIFICATION: The Logistics Directorate is involved in a number of systems areas to include logistics, strategic mobility, and mobilization functions. These efforts cover the spectrum from internal J-4 actions to worldwide support to the unified and specified commands. In support of this effort, the Logistics Directorate not only employs the assigned in-house military and civilian personnel, but also approximately 125 manyears of technical and contractor support. The development of a strategic systems master plan will allow the mapping of J-4 functional responsibilities and their linkage to J-4 functional areas. An extension of this mapping will show recurring tangible output products required from each functional area, and allow the alignment of planned technical/contractor support to the suitability of each activity in terms of priority, relevance, timing, and life cycle costs. The end result will be the design and implementation of a management system to select, prioritize, track, and integrate the management and utilization of both in-house and external manpower. The management system will be automated to provide for continuing update and revision of allocated resources and the expected products.

MOBILITY MODELING AND ANALYSIS

DIRECTORATE: J-4

IRM GOALS AND OBJECTIVES: 88-2b, 88-3b, 88-3c, 88-6b

JRP DESCRIPTION: This JRP includes the requirement to provide technical and analytic support for the analysis of and the modeling applications to the multiple strategic mobility studies that are on-going on a continuing basis in J-4.

JRP JUSTIFICATION: To provide technical and analytical support to the Director for Logistics, Joint Staff, J-4, over the total spectrum of mobility modeling , computer systems, data management systems and systems data files included in the current family of interconnected and supporting software/ hardware sub-elements.

SUBELEMENTS:

- Strategic Mobility Analyses and Modeling Systems (SMAMS)
- OPLAN Analysis (OA)
- JOINT EXERCISE MOBILITY MODELING SUPPORT (JEMMS)
- VAX APPLICATION SOFTWARE SUPPORT (VAX-SPT)
- Southwest Asia Reception Planning & Execution (SWA RP&E)
- Development of Data Management Systems and Methodologies for Joint Logistic Strategic Mobility Analysis (MOB R&D)
- NATO Reception Planning & Execution (NATO RP&E)

LOGISTICS PLANNING

DIRECTORATE: J-4

IRM GOALS AND OBJECTIVES: 88-1c, 88-2b, 88-3b, 88-3c, 88-5a

JRP DESCRIPTION: Automation of military and industrial mobilization planning process and integration into deliberate and crisis planning of the Joint Strategic Planning System and the Joint Operational Planning and Execution System (JOPES).

JRP JUSTIFICATION: The Logistics Planning JRPs are needed to insure that proper planning is accomplished to link warfighting needs of the CINCs with the logistics support capabilities of the US industrial base and to develop the military mobilization plans to support CINC operation plan mobilization requirements. Such planning will allow for a more informed assessment of the risks associated with the national military strategy both in the near and mid-term. The process will support the development of the mobilization strategy in coordination with deployment, employment and sustainment planning. It will also document the industrial mobilization steps that need to be taken to support the execution of JCS sponsored plans and operations.

SUBELEMENTS:

- Joint Industrial Mobilization Planning Process
- Joint Mobilization Planning and Execution System
- Joint Industrial Mobilization Planning Process (JIMPP) Hardware

LOGISTIC ANALYSIS SYSTEMS

DIRECTORATE: J-4

IRM GOALS AND OBJECTIVES: 88-2b, 88-3a, 88-3b, 88-3c, 88-4b

JRP DESCRIPTION: This JRP encompasses a series of systems designed to structure, analyze, evaluate, and monitor critical joint logistics activities accomplished by the JCS, unified and specified commands, and component commands worldwide in peacetime and in crisis situations.

JRP JUSTIFICATION: In total, the development and implementation of the subelements of this JRP provide for the capability to monitor the totality of the worldwide logistic activities and to determine the capability of available resources to support a theater command in wartime. To varying degrees, each of the subelements support the joint command and control process, and when fully developed, will benefit the JCS, the CINCs, and Component commands in enhancing their warfighting planning and execution capabilities.

SUBELEMENTS:

- Logistics Feasibility Analysis Subsystem
- Materiel Support Analysis Subsystem
- Logistics Monitoring Analysis Subsystem
- WIS-Logistics Systems Integration/Standardization

LOGISTIC CONCEPT DEVELOPMENT

DIRECTORATE: J-4

IRM GOALS AND OBJECTIVES: 88-1b, 88-1c, 88-2b, 88-3c, 88-4b, 88-5a

JRP DESCRIPTION: The Director for Logistics (J-4), The Joint Staff, has selected three significant projects to further the development of exploratory logistic concepts. These projects address the application of artificial intelligence to logistic decision-making of the unified commands, improvements in enhancing joint and combined logistic warfighting capabilities of the theater commands, and development of a decision support system for operation plan analysis and modification during the execution phase.

JRP JUSTIFICATION: Significant deficiencies exist in the logistic planning abilities of the Joint Staff and the unified commands. These include ineffective and inflexible procedures for managing and allocating scarce logistic assets to accommodate wartime requirements of the theater commanders. The unified commanders and the Joint Staff's Logistic Readiness Center also need the ability to perform feasibility analyses on varying courses of action in an execution environment (vice deliberate planning) and to revise OPLANs quickly. Further, joint logistic analysts need better software tools to accomplish prioritization of multiple important lists in a rational and efficient manner. Several new logistic concepts and techniques offer the potential to make great improvements in resolving these deficiencies.

SUBELEMENTS:

- Enhancing Joint & Combined Logistic Warfighting Capabilities
- Application of Artificial Intelligence to CINC Logistics Decision Support System/OPLAN Analysis

JOINT MEDICAL MOBILIZATION SYSTEM (JMMS)

DIRECTORATE: J-4

IRM GOALS AND OBJECTIVES: 88-2b, 88-3b, 88-3c, 88-5a, 88-5b

JRP DESCRIPTION: The Joint Medical Mobilization System (JMMS) will provide a CONUS medical treatment facility readiness reporting system in terms of personnel, training, supplies and equipment. This system will also provide a mechanism to support a mobilization workload for tracking and administratively supporting patients in Veterans Administration and civilian hospitals.

JRP JUSTIFICATION: There is no system available or planned to support the mobilization requirement, capabilities and capacity of CONUS military medical treatment facilities or to provide medical liaison team support in each of the 72 metropolitan areas which have been designated to receive and provide medical care for military casualties returned to CONUS for medical treatment.

7TH COMMUNICATIONS GROUP (7th CG) SUPPORT TO THE JOINT STAFF

DIRECTORATE: J-4

IRM GOALS AND OBJECTIVES: 88-2a, 88-2b

JRP DESCRIPTION: This JRP identifies the requirement to continue the 7th Communications Group (7th CG) support to the Joint Staff including use of the MULTICS computer. In FY 88 and FY 89 this support is being provided through the use of DCA/JDSSC funding (transfer of funds to 7th CG). JDSSC/DCA has indicated that they will not continue to fund for this support.

JRP JUSTIFICATION: JDSSC computer support to J-4 and J-8 is augmented by support from the Air Force 7th CG MULTICS Operating System. This is a unique support largely used in strategic mobility and other analyses. Modeling systems are jointly developed by OSD PA&E and J-4 and applied on the MULTICS computer. This allows common use of similar modeling capabilities by the Joint Staff and the OSD offices involved in strategic mobility studies and evaluations. This not only reduces the total cost of models to DOD but sets aside any possible conflict regarding methodologies employed in strategic mobility evaluations. The development of automated analysis capabilities is necessary to ensure the timely and accurate programmatic and budgetary support to the CJCS and the VCJCS in carrying out their new statutory responsibilities as provided in the Goldwater-Nichols Defense Reorganization Act and to support CJCS in his testimony before the Congress.

SUBELEMENTS:

- MULTICS Operating Systems Support (J-4)
- Force Planning, Programming, and Budgeting Analysis Program (J-8)

LOGISTICS READINESS CENTER

DIRECTORATE: J-4

IRM GOALS AND OBJECTIVES: 88-1b, 88-1c, 88-2b, 88-3b, 88-3c, 88-4a, 88-4c, 88-5a, 88-5b, 88-7a

JRP DESCRIPTION: To provide a capability to support the Logistics Directorate, Joint Staff, in responding to crisis situations and in participation in JCS exercises. Planned support includes participation in JCS exercises and similar activities. Unplanned support includes responses to JCS no-notice exercises, crisis and emergency situations. Technical support is required through dedicated JDSSC analysts in both the documentation and application of WWMCCS standard ADP systems as well as J-4 unique systems. The continued maintenance, enhancements, documentation and pre-exercise training in several data base system applications (programs) like Airfields Facilities Files Information System (AFFIS) for processing the Automated Air Facilities Information File (AFFIF) and Country Name-Country Code System (CNCC) is required. Includes computer based training for system operators, the provision of a responsive, comprehensive, user friendly automated logistic decision support system, and state-of-the-art computer hardware to plan, monitor, and execute JCS actions.

JRP JUSTIFICATION: The requirement is necessary in order to provide a capability to support the Logistics Directorate, Joint Staff, in responding to crisis situations and in participation in JCS exercises.

SUBELEMENTS:

- Logistics Readiness Center (LRC) Support
- Computer Based Training for the LRC
- Logistics Readiness Center (LRC) Upgrade

STRATEGIC FORCE PLANNING

DIRECTORATE: J-5

IRM GOALS AND OBJECTIVES: 88-2b, 88-3b, 88-4a, 88-4b, 88-4c, 88-4d, 88-6c

JRP DESCRIPTION: (1) Provides analytic and technical support for the development and maintenance of the nuclear annexes to Joint Staff plans. (2) Provides technical analyses and software maintenance for programs supporting nuclear weapons employment policy and plans, e.g., SIOP assessment, comparison of nuclear lay-downs on target bases, and comparison calculations between target damage to objective collateral damage. (3) Provides software development to support connectivity between DIA computers and Joint Staff Support Information System (JSSIS). (4) Provides Research and Development (R&D) funding to support strategic studies.

JRP JUSTIFICATION: Technical and Automatic Data Processing (ADP) support is required to develop nuclear annexes to Joint Staff planning documents and to support ad hoc analyses in response to queries from DOD agencies/offices, including OSD, the Services, CJCS, and DJS, as well as in response to Presidential directives.

Analyses of nuclear force targeting is required to optimize strategic planning in the development of the Joint Strategic Capabilities Plan (JSCP) Annex C. This project is required to support the development of a time-phased data base for SIOP development planning, ad hoc special analyses of collateral damage and object vulnerability, and assessment of ancillary policy requirements, such as, reserve force strategies and the contribution of non-SIOP, coordinated war plans to SIOP objectives.

Strategic force planning studies are required to help the Deputy Director for Strategy and Policy (DD S&P) derive optimum force strategy, force policy, and force guidance to meet an ever changing threat.

SUBELEMENTS:

- Nuclear Weapons Planning, Deployment, Allocation, and Assessment (NWPDAA)
- Nuclear Targeting Policy Analyses (NTPAS)
- Strategic Studies

INTERNATIONAL NEGOTIATIONS SYSTEMS

DIRECTORATE: J-5

IRM GOALS AND OBJECTIVES: 88-2b, 88-3a, 88-3b, 88-5a, 88-5b, 88-5c

JRP DESCRIPTION: Provides technical and Automatic Data Processing (ADP) support for the development/ fielding/improvement/maintenance of the International Negotiations System (INS) and the Soviet Offensive Forces Analysis and Retrieval (SOFAR) software model.

Provides research and development (R&D) funding to support international negotiations studies to compliance, verification, and testing activities and to analyze U.S./NATO/Warsaw Pact capabilities/positions for both nuclear and conventional weapons.

JRP JUSTIFICATION: Technical and Automatic Data Processing (ADP) support is required to support INS and SOFAR which are required to support the development of the U.S. military position in preparing international treaties, documents, and Joint Staff position papers.

Planning wedge funding is required to perform International Negotiations studies for determining relevant U.S./NATO/Warsaw Pact weapon relationships and project a methodology toward reducing/eliminating comparable armament capabilities. These type studies are also required to help determine relevant measures needed to consummate treaty accords and to develop treaty concepts and force trade-off opportunities.

SUBELEMENTS:

- Weapons Reduction Talks Systems (WRTS)
- Negotiations Studies

POLITICO-MILITARY PLANNING

DIRECTORATE: J-5

IRM GOALS AND OBJECTIVES: 88-2b, 88-3a, 88-3b, 88-4a, 88-5c

JRP DESCRIPTION: Provides technical support for introducing data bases and Automatic Data Processing (ADP) capabilities into the Joint Staff Support Information System (JSSIS) in support of the politico-military monitoring and assessment processes. Capability includes collecting and analyzing information on crises situations, defense agreements, host nation support, raw materials, security assistance, rules of engagement, country profiles, etc.

Provides Professional Management Services (PMS), and Operations and Maintenance (O&M) Studies funding for politico-military planning studies.

JRP JUSTIFICATION: New and enhanced politico-military data base capabilities are necessary to help the politico-military action officer in the preparation and staffing of planning documents and in the development of Joint Staff position papers in preparing for visits by foreign dignitaries. This initiative also builds and establishes data bases for crisis and exercise activities.

With vacillating international policies, the Joint Staff continually requires analysis and study of politico-military events to anticipate and properly respond to varying country actions -- in all situations, preparedness is key to the United States maintaining an optimal politico-military perspective/position.

SUBELEMENTS:

- Politico-Military Policy Determination Support (PMDS) System
- Politico-Military Studies

LONG-RANGE DEFENSE PLANNING

DIRECTORATE: J-5

IRM GOALS AND OBJECTIVES: 88-1a, 88-2b, 88-3a, 88-4a, 88-4d, 88-5c

JRP DESCRIPTION: Provides analytic, Automatic Data Processing (ADP), and technical support for the development, fielding, improvement, and maintenance of a state-of-the-art strategic analysis, forecasting, planning, and decision-support system. Capability will enhance J-5's ability to strategically plan by linking directorate-unique, strategic analysis and planning software with the Rand Strategic Assessment System (RSAS) and CINCPAC's Strategic Automated Discovery System. Provides Research and Development (R&D) funding to support long-range defense planning studies.

JRP JUSTIFICATION: The Joint Staff needs enhanced analytic, forecasting, planning, and decision-support tools to identify long-range (out to 20 years) threats to security, potentials for future military conflict, alternative future strategic environments, and future opportunities. These tools would aid in planning future courses of action and in forecasting potential consequences, so that future national security needs and military requirements can be identified, and appropriate military strategy planned to support the attainment of U.S. national security objectives. These long-range analyses and forecasts are required to help produce the Joint Strategic Planning Document (JSPD), Annex G (Long-Range Planning Guidance) for the Services and Defense agencies, and other Joint Staff long-range strategic planning papers.

The Joint Staff requires continuing baseline studies by a contractor to assist in the development of the JSPD Annex G (Long-Range Planning Guidance) both prior to its next publication in August 1989 and beyond. To be complete and accurate, modeling and simulations are required to provide the methodology and analytic framework for detailed long-range planning by the Services and Defense agencies. Technical analysis support is required to develop and plan the numerous alternative scenarios and sets of assumptions to derive the best strategies for the range of possible future strategic environments.

SUBELEMENTS:

- Long-Range Strategic Appraisal and Military Planning (LRSAMP)
- Long-Range Defense Studies

DEFENSE-WIDE C3 SYSTEMS SUPPORT

DIRECTORATE: J-6

IRM GOALS AND OBJECTIVES: 88-2b, 88-3a, 88-3b

JRP DESCRIPTION: The subelement contracts provide for the development and review of procedures and programs to ensure that maximum joint interoperability and utility are achieved. The specific subelements describe the individual programs and procedures that are being worked.

JRP JUSTIFICATION: JCS/J6 is charged to assure timely, accurate, and comprehensive planning and validation of joint and combined operations and requirements. Achieving technical, procedural, and operational interoperability would be severely set back without contractor support to assist in the review process. Specific responsibilities are spelled out in the subelement justifications.

SUBELEMENTS:

- CINC C^2 Initiatives Program
- Joint Operational Concepts for Joint Tactical Information Distribution System (JTIDS)
- J-6 Command and Control Upgrade Support
- NMCC Fusion Center

JOINT PLANNING CONCEPT AND DEVELOPMENT

DIRECTORATE: J-7

IRM GOALS AND OBJECTIVES: 88-1a, 88-1b, 88-1c, 88-2b, 88-3a, 88-3b, 88-3c, 88-4a, 88-4b, 88-4c, 88-4d, 88-5a, 88-5b, 88-5c, 88-6c, 88-7a

JRP DESCRIPTION: This JRP supports the future requirements for an integrated system to support US conventional command and control. This system will support monitoring, planning, and execution of mobilization, deployment, employment, and sustainment activities both in peacetime and under crisis and wartime conditions. This system will include trained personnel, procedures, reporting systems, communications, and ADP support for dealing with the Command and Control problems handled by the NCA and War Planners at the Joint Staff, Services, CINCS and their components, and agencies. When fully operational, the system must support monitoring the status of forces and resources and the development of feasible military options to respond to imminent threats within hours and feasible detailed plans within a matter of days.

Specifically, the system will support:

(1) Developing single scenario or multi-scenario operation plans and selected supporting plans in peacetime (deliberate planning process).

(2) Conducting and monitoring mobilization, deployment, employment, and sustainment activities and coordinating conventional and nonconventional military operations during execution (implementation process).

(3) Monitoring the status and readiness of forces and resources.

JRP JUSTIFICATION: Evaluations of exercises such as NIFTY NUGGET, PROUD SPIRIT, PROUD SABER, and actual real world situations have identified numerous problems in planning and controlling the employment, deployment, mobilization and sustainment of combat, CS, and CSS forces. Independent evaluations have confirmed that the major deficiencies found in the current "system" are of two types: functional and procedural shortfalls in the process used for monitoring, planning, directing, and controlling forces and resources; and technical shortfalls in the support provided to these processes. The underlying theoretical base for the system is sound. The problems that exist in the current "system" are, in fact, a patchwork of many independent systems developed over many years without considering integration requirements. These

systems have been developed to serve many users with widely varied needs. Recognition of the impossibility of overcoming this lack of integration by only revising current systems is the basic reason for this JRP.

SUBELEMENTS:

- JOPES Data Administration
- Auto-Force Generator
- JOPES Prototyping

JOINT TRAINING AND EDUCATION SUPPORT

DIRECTORATE: J-7

IRM GOALS AND OBJECTIVES: 88-2b, 88-7a

JRP DESCRIPTION: This JRP supports the joint training and joint education functions of J-7, and updates and maintenance of the Joint Staff Officer Training System (JSOTS). JSOTS training must be reviewed and revised each year if it is to remain viable. these funds provide support required for software update, curriculum revision, changes in lesson materials, videodisk remastering, and equipment repair if needed. Joint Training Support provides for such areas as oversight of the Joint Warfare Center, coordination in the development of joint wargaming/simulations and CINC assistance in developing joint training programs. Joint Education Support provides for travel to the professional military education colleges and CINCs for policy development and oversight and curriculum review.

JRP JUSTIFICATION: Continual JSOTS instructional updates are required to preclude JSOTS instruction from becoming rapidly obsolete and useless, negating the previous development. Videodisk will need to be remastered annually. Joint Training Support provides funds in support of JCS Pub 2, joint training objectives, and joint training requirements of the Goldwater-Nichols DoD Reorganization Act. Congressional interest in joint education continues to intensify, as it has over the past few years, and additional legislation on professional military education is likely. On-site coordination with the professional military education schools and CINCs is essential to fulfilling Joint Staff responsibilities. As noted previously, travel to military education colleges partially fulfills CJCS responsibility for joint education under Title II and Title IV of the Goldwater-Nichols DoD Reorganization Act.

SUBELEMENTS:

- Joint Staff Officer Training System (JSOTS)

JOINT INTEROPERABILITY SUPPORT

DIRECTORATE: J-7

IRM GOALS AND OBJECTIVES: 88-1a, 88-1b, 88-1c, 88-2b

JRP DESCRIPTION: the Joint Interoperability Support Program addresses a variety of requirements to improve the warfighting capabilities of the unified and specified combatant commands. these include travel to support the Joint Requirements Oversight Council (JROC) and Wartime Reserve Modes Oversight Committee (WARMOC), and hardware and software support for the Joint Center for Lessons Learned (JCLL).

JRP JUSTIFICATION: JROC and WARMOC require liaison with CINCs and hardware and software support not provided by JSSIS.

JCLL requires special hardware and software and attendant maintenance not supported by JSSIS or WWMCCS.

SUBELEMENTS:

- Joint Center for Lessons Learned (JCLL)

CINC STUDIES PROGRAM

DIRECTORATE: J-8

IRM GOALS AND OBJECTIVES:

JRP DESCRIPTION: This is not support to the Joint Staff and cannot be directly compared with Joint Staff requirements. The CINC Studies Program supports only the Unified and Specified Commands by providing direct access to OSD controlled and specified research and development funds for conducting studies of critical joint war fighting issues. Funded since FY 1988 by P.E. 65104D, Technical Support to USD(A) and the Joint Staff, the program was initiated in FY 1986 by resources provided at the direction of DEPSECDEF from the services. Topics studied to date include: improvements in joint theater warfare simulation capabilities, strategic airlift scheduling, enhancing satellite survivability, and intra-theater movement of strategic reinforcements (1986); theater air defense logistics requirements, distributed wargame development, theater C2 upgrade study, MILSTAR satellite support to naval/theater forces, and CINC space wargames (1987); crisis expert system in support of special operations, application of artificial intelligence to strategic airlift planning and scheduling, inexpensive special area satellites, B-52 conventional operations, and wartime sustainability of theater forces (1988).

JRP JUSTIFICATION: The CINC staffs have responded with enthusiasm to this opportunity to receive access to hard-to-get R&D studies funds. CINC-validated requirements have increased from $9.94M (33 projects) in FY 86, to $13.104M (49 projects) in FY 1987, and on to $19.437M (69 projects) in FY 1988. Both OSD and the Joint Staff have put themselves on record as supporting the very high value of the program, and CINCs and DCINCs have also written "personal for" messages supporting it. This is a unique, high value way for the JCS to provide seed money for new CINC concepts which support improvements in joint war fighting capabilities. Funds are provided from the OSD budget at no direct cost to the Joint Staff. If this JRP is not funded at a level consistent with CINC requirements, CINC initiatives in the joint warfighting areas will be seriously affected by the lack of seed money to evaluate these initiatives. As a result many promising efforts will not be undertaken while others, more attractive in concept but with a

much smaller chance of success, may be initiated. Failure to provide any funds for this effort will undermine the role of the Chairman and the Joint Staff as the voice of the CINCs in the OSD resource arena; CINC staffs will be dependent on the Services and their own programmatic priorities for funds to evaluate issues of cross-functional, multi-Service character in which the CINC studies have been concentrated.

FORCE PLANNING, PROGRAMING, BUDGETING ANALYSIS ENHANCEMENTS

DIRECTORATE: J-8

IRM GOALS AND OBJECTIVES: 88-1a, 88-1b, 88-1c, 88-2a, 88-2b, 88-3a, 88-3b, 88-3c, 88-7b

JRP DESCRIPTION: This program provides for an automated technical support system to assist the Joint Staff and CINCs in their assessment of Service POMs; for models to be used by the Joint Staff in conducting studies and resource related analyses of alternative general purpose and integrated battle force structure, strategies, and postures in support of CJCS; and automated tools for the Joint Staff to use when they conduct warfighting capability impact assessments of the program and budgetary proposals upon upgrade, force structure, resource support, and doctrinal aspects of the Armed Forces in support of the JCS in their review of resource requirements for major strategic and logistical plans.

JRP JUSTIFICATION: This program is required to meet JSPS deadlines in Service POM assessments; to meet the current requirements, maximum automation of data search technique is mandatory. Models and automated tools are required to provide timely and accurate support to the CJCS and VCJCS when force structure analyses are required/requested and when they participate on the DRB and JRMB. Further, this program provides the automated tools necessary to support the CJCS in his testimony before Congress.

SUBELEMENTS:

- Program Computer Operations
- Assessment Support
- Model Development
- Model Hardware Upgrade
- Program Model Database Enhancements
- Program Software Conversion

J-8 CINC WARGAMING SUPPORT

DIRECTORATE: J-8

IRM GOALS AND OBJECTIVES: 88-1a, 88-1b, 88-1c, 88-2a, 88-2b, 88-3a, 88-3b, 88-3c, 88-7b

JRP DESCRIPTION: This JRP is designed to fully integrate the ADP system and analytic support functions associated with the conduct of politico-military games. This will be accomplished through the acquisition of a microcomputer-based ADP support system capable of being enhanced and/or modified as required. It also involves the acquisition of expert assistance in developing and maintaining analytic models.

JRP JUSTIFICATION: J-8/PMSAD conducts an annual politico-military seminar game for the Joint Chiefs and CINCs' called the CINCs' Conference War Game (CCWG). Other politico-military games are conducted on behalf of the Joint Chiefs, the Services, DOD Agencies, and others as directed. The CCWG is held at a site selected by the Service host, a responsibility which rotates annually. Other games are conducted in the PMSAD spaces (Pentagon BC942) or, increasingly, at other locations. Over several decades a precise methodology for the conduct of these games has evolved. Two distinct areas of support, administrative and analytical, are involved in the preparation for and conduct of politico-military games. In the past, requirements relative to these support areas have been addressed incrementally and in isolation. CWS addresses all those supports which perform or aid in the performance of all of the administrative and analytical processes associated with the conduct of the CINCs' Conference War Game and all other politico-military games conducted by J-8/PMSAD.

SUBELEMENTS:

- Graphics Cell Support
- War Game Support System (WSS)
- Conflict Resolution Cell Model Support

MILITARY NET ASSESSMENT AND CONVENTIONAL FORCE ANALYSIS

DIRECTORATE: J-8

IRM GOALS AND OBJECTIVES: 88-1a, 88-1b, 88-1c, 88-2a, 88-2b, 88-3a, 88-3b, 88-3c, 88-7b

JRP DESCRIPTION: National Security Defense Directive 219 directs the Chairman, Joint Chiefs of Staff to conduct Military Net Assessments of U. S. Forces and potential adversaries. The Director of the Joint Staff (DJS) directed CAD to develop the methodology for evaluating proposed force and strategy options in the Net Assessment Process. In addition, the DJS also tasked CAD to conduct worldwide theater level warfighting analysis in order to evaluate alternate force structures, strategies and deployment schedules in support of the JSPS and the PPBS. The baseline analytic effort is the Total Force Capability Assessment (TFCA) conducted for the JCS with participation from the services, DIA, and the Joint Staff. TFCA has been conducted since 1979 in support of the planning and programming process and has as its ultimate objective the development of methodology for authoritative assessments of U.S. and allied force capabilities worldwide and across the spectrum of warfare. This JRP is designed to allow J-8 to continue the TFCA and to provide the ability to conduct excursions to that game in response to demands for conventional force analysis in support of the joint decision processes.

JRP JUSTIFICATION: The Military Net Assessment is used to support the Chairman, Joint Chiefs of Staff, in his responsibility to assist the President and Secretary of Defense in strategic planning. Objectives of the Military Net Assessment are to compare the total capabilities of US military strategies and forces developed in the JSPS, with those of potential adversaries and identify risks of the national military strategy, force structure, budget level, and options. The Military Net Assessment will be a key part of the national security planning and budgeting process. It is a vital element in assessing the adequacy of us and allied forces to carry out the national objectives.

SUBELEMENTS:

- Conventional Force Analysis Computer Operations
- TACWAR Model Operations and Development (PSE)
- Net Assessment Support Tasks (JDSSC)
- Net Assessment Methodologies (IDA)
- Logistic Aspects of Net Assessment (J-4)
- Presentation Graphics System
- Conventional Force Analysis Data Base Development/Management

- Conventional Force Analysis Software Conversion
- Conventional Force Analysis Hardware Upgrade
- JAWS Development (LOGICON)
- Application of RAND Strategy Assessment System Technology

NUCLEAR FORCES ANALYSIS

DIRECTORATE: J-8

IRM GOALS AND OBJECTIVES: 88-1a, 88-1b, 88-1c, 88-2a, 88-2b, 88-3a, 88-3b, 88-3c, 88-7b

JRP DESCRIPTION: In accordance with NSDDs 160 and 219, JCS 2056/627 and 1948/170, and JSCP Annex C, Nuclear Forces Analysis directly supports the Chairman and the Joint Chiefs of Staff by providing the accomplishment of assigned studies and analyses on critical JCS issues. Current and projected strategic and nonstrategic offensive and defensive nuclear force capabilities are analyzed using a wide range of analytic methodologies and comparative analyses of military options for strategic and nonstrategic warfighting. Additionally, Nuclear Forces Analysis supports the international arms control negotiations process by conducting studies of alternative force levels and negotiating strategies. Included is the planning, development, analysis, briefing, and reporting of the Red Integrated Strategic Offensive Plan (RISOP) with direct supervision and active coordination of members of the JCS Red Planning Board. An in-depth evaluation of SIOP effectiveness relative to the RISOP is conducted providing the only independent analysis of the SIOP and strategic connectivity.

JRP JUSTIFICATION: Nuclear Forces Analysis directly supports the Chairman and the Joint Chiefs of Staff in their responsibility to advise the Secretary of Defense and the President concerning strategic and nonstrategic nuclear force issues. This analysis greatly influences organizations such as the Joint Strategic Target Planning Staff, the Scientific Advisory Group to CINCSAC, the Arms Control Negotiations Team, the JCS Red Planning Board, as well as supporting the Joint Chiefs of Staff to determine and resolve present and future force issues. If this JRP is not completely funded, the Joint Chiefs of Staff access to force analyses will be limited, severely effecting the quality of the analytical data used to determine policies concerning arms control, optimum force structures, and current and future warfighting capability.

SUBELEMENTS:

- Nuclear Force Analysis Computer Operations Support
- Threat Development Analysis
- War Games Analysis
- Strategic Forces Analysis
- Strategic Defenses Analysis
- Nonstrategic Nuclear Forces Analysis
- Nuclear Force Analysis Software Conversion
- Nuclear Force Analysis Model Database Development/Management
- Nuclear Force Analysis Hardware Upgrade

MODERN AIDS TO PLANNING PROGRAM (MAPP)

DIRECTORATE: J-8

IRM GOALS AND OBJECTIVES: 88-1a, 88-1b, 88-1c, 88-2a, 88-2b, 88-3a, 88-3b, 88-3c, 88-7b

JRP DESCRIPTION: MAPP is a Joint Chiefs of Staff and CINC initiative to assist the CINCs of the unified and specified commands in obtaining state-of-the-art analytical capabilities, both hardware and software, to improve war planning and execution through the use of simulation and analysis techniques. In addition to the primary MAPP users, CINC components, senior Service schools, War Colleges, Service undergraduate and postgraduate institutions, and Service analytical organizations also participate in, and benefit from, the program. The purpose of this JRP is to continue ongoing support to the CINCs by completing the development of existing MAPP tools; acquiring and adapting additional tools; documenting, maintaining, and distributing these tools; training CINC staffs in the use of delivered MAPP capabilities; constructing necessary databases and data manipulation capabilities; supporting ongoing CINC analyses; interfacing with both current and future planning systems; providing information exchange within the MAPP community; and ensuring that all current and future capabilities exploit state-of-the-art methodologies and techniques while addressing the analytical requirements of the CINCs. As of FY87, MAPP provided initial hardware suites, including commercial off-the-shelf analytical software, to all unified commands and those specified commands and sub-unified commands participating in the program. During FY88, some of the new commands created by the Defense Reorganization Act and newly participating sub-unified commands will acquire initial hardware suites while existing sites receive minor upgrades. Future requirements for hardware include the completion of the initial suite distribution to all unified and specified commands, research into new developments, and continued upgrade of existing sites to keep pace with changes in technology and program evolution. In the software area, the two centerpiece components of the program, JTLS and SOTACA, are being delivered in prototype form to the MAPP community. These two models provide unique capabilities not found in any other analytical tools available to the CINCs. Following a strategy of rapid prototyping and subsequent evolutionary change, these models must be developed in accordance with the stated needs of the CINCs (based on their use in actual analyses) to provide fully mature models with the requisite capabilities. Also, in response to the CINCs' needs, additional MAPP tools will have to be identified, modified as appropriate to ensure compatibility with existing MAPP configurations, and then blended into the program to

provide the necessary spectrum of analytical tools. Finally, and perhaps most importantly, as the CINCs begin to aggressively use these tools, timely support, to include training and documentation, must be provided to ensure their continued effectiveness. This JRP will have a direct and profound impact on the ability of the CINCs' analytical staffs to conduct meaningful analyses of war plans, resultant campaigns, and war fighting requirements. The task results from the MAPP Terms of Reference (SM-463-85). MAPP also supports JOPS/JDS, and ultimately JOPES once it is operational, by providing capabilities that help satisfy the simulation and analysis requirements of these systems.

JRP JUSTIFICATION: Continued funding of this JRP is essential to support this vital and innovative JCS initiative and thereby capitalize on the capabilities acquired to date. Before MAPP, the CINCs had virtually no analytical capabilities to devote to the planning process and there was no focal point for the articulation of such needs. General Vessey, as CJCS, recognized this unsatisfactory treatment of a critical issue and mandated a program to correct this deficiency. General Vessey saw the ever increasing sophistication of computational devices and their application to analyses; however, the CINCs had neither the skilled personnel nor the tools to exploit analysis techniques in the context of the planning process. Due to General Vessey's vision, a unique program was conceived, developed; and the early stages of its application reached. Throughout this period, the JCS and the CINCs have expended considerable effort and funds in order to create the initial MAPP capability in existence today: populated analytical cells with the rudimentary facilities, hardware, and software needed to begin meaningful analyses. The program is just entering the application phase and its tools are starting to contribute to actual analyses in support of the planning processes. The capabilities so carefully constructed over the past four years, while remarkable compared to the pre-MAPP era, still require considerable improvement to provide the minimal capability necessary to properly support the planning processes. Without adequate funding, the current models will remain in their prototype stages and will not address the essential issues in the required manner. Hardware will become increasingly outdated and eventually unusable. New tools will not be added to the program and the CINCs will be forced to resort to ineffective manual procedures or somehow adapt inappropriate models with the attendant risks of either duplication or omission. Crucial user support, training, and communications between users will not be provided and the ongoing analysis efforts of the CINCs will become fragmented resulting in inefficient utilization of remaining resources. Research into new methodologies will be curtailed and the central theme of the program, state-of-the-art capabilities, will cease to exist. Development of data bases and vital interfaces to the planning systems will be suspended leaving the remaining capabilities useless due to lack of timely and accurate data. This dynamic and successful program is just beginning to show

results and given the proper resources, the future is very promising. MAPP is the only source of the needed joint analysis capabilities available to the CINCs as they alone do not possess the requisite resources needed to develop these unique items. Unless the program is adequately resourced during the 1990-1994 time frame, the CINCs will not be able to capitalize on the resources and effort expended to date, their existing capabilities will atrophy, and the program will not be able to provide intended capabilities. The result will be a return to the pre-MAPP situation whereby complex decisions that directly influence operational success will be based on back of the envelope analyses, or no analyses at all, the tremendous analytical power afforded by state-of-the-art computational devices will be lost to the CINCs, and the investment of previous years negated.

SUBELEMENTS:

- MAPP Program Management
- MAPP CINC Support
- MAPP Support Task
- MAPP Computer Operations Support
- MAPP CINC Computer Procurement
- State of the Art Contingency Analysis (SOTACA) Model Development
- Joint Theater Level Simulation (JTLS) Model Development
- CINC-Unique Programming Support
- Air Courses of Action Assessment Model (ACAAM) System Development
- MAPP Database Management
- MAPP New Model Additions
- MAPP/Planning Systems Interface
- Logistics Aspects of MAPP
- MAPP Model Software Conversion
- MAPP Model Database Automation
- MAPP Advanced Methodologies Research
- MORS Sponsorship/Modeling Catalog Update

CURRENT OPERATIONS

DIRECTORATE: DIRM

IRM GOALS AND OBJECTIVES: 88-1a, 88-1b, 88-1c, 88-2b, 88-4d, 88-5c, 88-6c, 88-7b

JRP DESCRIPTION: Provides continued operations and maintenance of existing information technology systems in the Joint Staff.

JRP JUSTIFICATION: The subelements listed below are currently operating. The subelements reflect O&M and procurement tails needed to continue to operate. The Joint Staff must maintain existing equipment and systems, so the funds reflected above and under each subelement cannot by considered as discretionary.

SUBELEMENTS:

- Joint Staff Support Information System
- Application Program Development and Maintenance
- TEMPEST Portable Computers
- Miscellaneous Professional Computers and Word Processors
- Desktop Publishing/Computer Aided Design (CAD)
- MicroVAX II Computer (J6)
- VAX Computer (J4)
- Commercial off-the-shelf (COTS) Software Maintenance
- Joint Staff Security System
- Technical Expertise
- JCS Mapping System (J5)
- Digitizing/Graphics Workstation for the Civil Engineering Support Plan Generator

JSSIS ADDITIONAL CONTRACTS

DIRECTORATE: DIRM

IRM GOALS AND OBJECTIVES: 88-1a, 88-1b, 88-1c, 88-2b, 88-4d, 88-6a

JRP DESCRIPTION: This JRP addresses requirements needed for JSSIS, but not available on the JSSIS contract. All requirements are office automation requirements that are identified by the Joint Staff user and validated under the Configuration Management Board.

JRP JUSTIFICATION: The scope of the existing JSSIS contract with Wang Laboratories, Inc., does not address all office automation requirements within the Joint Staff. While the easiest solution would be to modify the existing contract, Federal Acquisition Regulation requirements for "fair and open competition" prohibits modifications which change the scope of the contract. Hence the requirement to meet those office automation requirements not on the existing JSSIS contract through other contractual vehicles.

SUBELEMENTS:

- J-1 Manpower Survey Automation Integration
- TEMPEST Color Plotters
- J-3/7 JSSIS Computer and Computer Center Upgrade

JOINT STAFF INTEGRATION EFFORT

DIRECTORATE: DIRM

IRM GOALS AND OBJECTIVES: 88-1a, 88-1b, 88-1c, 88-2b, 88-4b, 88-4d, 88-5c, 88-6a, 88-6b, 88-6c, 88-7a

JRP DESCRIPTION: Provides increased information systems integration with state-of-the-art technology to meet current and future JCS mission requirements. Includes developing an information systems architecture, network management facilities, subsystem interfaces with HYPERchannel, WIN/JSSIS connectivity, and expert systems development. Database machine and office archiving are being addressed separately because of magnitude.

JRP JUSTIFICATION: In addition to office automation provided under other RFPs, action officers require an effective communications system, integrated with other Joint Staff systems and systems outside the Joint Staff. This initiative will provide this required connectivity, with the ultimate goal of one (versus multiple) workstations on each action officer's desk.

SUBELEMENTS:

- Architecture
- Expert Systems Requirements
- FAX equipment
- JSSIS To External Systems Interface
- Network Management
- High Resolution Graphics and Secure Video
- Video/Computer Aided Instruction
- Secure Trusted-Local Area Network
- Directorate Microsystems (J5)

CORPORATE DATA BASE

DIRECTORATE: DIRM

IRM GOALS AND OBJECTIVES: 88-1a, 88-2b, 88-3a, 88-3b, 88-3c, 88-4a, 88-4b, 88-4c, 88-4d, 88-5a, 88-5b, 88-5c, 88-6a

JRP DESCRIPTION: Corporate data bases are those data bases which are used by two or more directorates, and may indeed be used by the whole Joint Staff. They contain network accessible data that are managed as a Joint Staff-wide information resource. Examples of data bases containing corporate data are the Joint Staff Action Tracking System, the Joint Staff Budgeting System, and the Joint Staff Data Dictionary. The corporate data base system also contains external data bases. External data bases are those data bases which are not under Joint Staff control (i.e., data accessed through electronic gateways by Joint Staff computers or workstations connected to the Joint Staff or by workstations directly connected to the external source). This includes other DoD systems, commercial data base services (e.g., weather data, legal information, and news services), and other federal government systems.

To serve the immediate need for housing Joint Staff corporate-level data, a centralized corporate data base storage and retrieval capability was established in mid-FY87. This was the first phase of a four-phased approach to handling corporation-wide data bases. The first phase was designed to physically consolidate existing vertically-developed data bases into a single centralized computer. The second phase will enhance the storage and processing capacity of the corporate data base system to match anticipated growth in user demand for data base processing. The third phase will implement standard access and query protocols to the corporate data base and the fourth phase will integrate the corporate level into a LAN architecture for distributed data base storage.

JRP JUSTIFICATION: This JRP continues the establishment and maintenance of the Joint Staff corporate data base system as described above. This JRP supports requirements for corporate-level access to common systems defined by each of the Joint Staff Directorates and validated by the Joint Information Management System (JIMS) Configuration Management Board (JCMB). The benefits of managing data as a corporate resource stem from economies of storage and retrieval and increased assurances of data consistency, data accuracy and data

timeliness through centralized control; thus increasing the likelihood of managers making correct decisions.

SUBELEMENTS:

- Data Base Machine
- Data Base Administration
- External Data Base Access
- External Data Base Acquisition

HIGH DENSITY STORAGE

DIRECTORATE: DIRM

IRM GOALS AND OBJECTIVES: 88-1a, 88-1c, 88-2b, 88-4d, 88-5b, 88-5c, 88-6a

JRP DESCRIPTION: The Joint Staff has a requirement to electronically process document images and access very large external reference databases. This capability is needed to help shorten critical staff processes and reduce the manhours action officers and other users spend researching and developing staff instruments. High density storage is the use of optical disk technology to electronically store, retrieve and manipulate document images and very large databases. This JRP also includes the other system components necessary to use high density storage technology including a host computer workstation, software, Optical Character Reader/Scanner (OCR/S), laser printers and high resolution monitors.

High density storage would supplement the existing archival capabilities now being implemented by DOCDIV with the Document Storage and Retrieval System (DS&RS) and provide a full text search capability not otherwise available. DS&RS will be used for storing "corporately" maintained historical documents, while high density storage will be oriented towards office level capabilities. Two kinds of high density storage are included in this JRP. Write Once Read Many (WORM) optical disk will be used for storage, retrieval and manipulation of document images and text files. Compact Disk Read Only Memory (CD-ROM) optical disk will be used for reference to very large external databases not accessible via other means. The procurement vehicle for this JRP will be the contract to be established by the Integration JRP. High density storage is identified as a separate JRP because of the size of the requirement.

JRP JUSTIFICATION: Document storage, retrieval and manipulation of internal documents as well as access to large databases from outside the Joint Staff is required at almost every organizational level within the Joint Staff. Action officers and other users in several Directorates have a need to rapidly retrieve document images to research and support a wide variety of projects and staff actions. Currently this is a mostly manual process requiring several manhours that may or may not result in the location of the necessary historical or reference data. High density storage and its related capabilities will allow users to access the seconds by entering English-like queries and keyword searches. Users will then be able to electronically "cut and paste" documents or data to rapidly construct required staffing instruments without time consuming rekeying of information. A user may also simply view

and/or print an electronic image of a document for later reference. If a paper copy of a useful document is all that is available, it can easily be converted to electronic form (without keying) and then be manipulated. Other requirements met by high density storage include electronic transmission of data otherwise only available in paper form and access to large reference databases not available via other means. Also there are at least two benefits of high density storage not directly related to identified requirements. These benefits include very low storage costs and floor space savings.

SUBELEMENTS:

- Optical Character Reader Workstations
- Office Archiving
- CD-ROM External Databases
- Additional Storage Media

JSSIS FOLLOW-ON

DIRECTORATE: DIRM

IRM GOALS AND OBJECTIVES: 88-1a, 88-1b, 88-1c, 88-2b, 88-4b, 88-4d, 88-6a, 88-6b, 88-6c

JRP DESCRIPTION: By 1995 the current JSSIS system will be at the end of its normal efficient life and the existing contracts will also be ending. In order to provide the required support to action officers and other members of the Joint Staff a follow-on system utilizing state-of-the-art equipment will be required. The follow-on system will include the implementation of upgrades to maintain the continued utility of the current JSSIS and JIMS projects until transition occurs to those new ADP solutions required by the obsolescence of equipment brought in under the 1985 JSSIS and supplementary contracts.

JRP JUSTIFICATION: Block obsolescence of equipment contracted for and brought in under the 1985 JSSIS and supplementary contracts as well as continuing and new requirements for automation support by action officers and other members of the Joint Staff dictate the need to replace JSSIS with a follow-on state-of-the-art system which will increase individual productivity through the utilization of technological advances available in the early to mid-1990s.

SUBELEMENTS:

- Determination of Needs and Alternatives Analysis
- Develop Technical Requirements and Prepare Solicitation
- Conduct Source Selection/Award Contract/Replace Equipment

INTEGRATED TELEPHONE SYSTEM

DIRECTORATE: DIRM

IRM GOALS AND OBJECTIVES: 88-1c, 88-2b, 88-4b, 88-6b, 88-6c

JRP DESCRIPTION: The Joint Staff requires the capability to combine secure and non-secure voice service, computer-to-computer data transfer, secure facsimile, and full-motion video teleconferencing in a desktop configuration. System should be able to integrate with other automation systems.

JRP JUSTIFICATION: The Joint Staff must be able to conduct information sharing in a manner consistent with the capabilities of other government agencies and outside organizations. This capability must reflect the state-of-the-art of the 1990s in order for the staff to operate successfully and fulfill its mission. Existing systems must be replaced or enhanced to meet future requirements.

SUBELEMENTS:

- Integrated Voice and Data System

DOCUMENT STORAGE AND RETRIEVAL SYSTEM

DIRECTORATE: SJCS

IRM GOALS AND OBJECTIVES: 88-1a, 88-2b, 88-3a, 88-3b, 88-3c, 88-4a, 88-4c, 88-5c, 88-6a, 88-6b

JRP DESCRIPTION: The Document Storage and Retrieval System (DS&RS) consists of four systems which provide action officers an automated capability to identify, retrieve and print abstracts of documents and entire documents at a terminal through the use of keywords and unique identifiers. Three of the subelements of this system, (JISR, PDPRS, and NATO DOC) will be incorporated into the fourth subelement, DS&RS and then will be terminated. When DS&RS is fully implemented, it will contain JCS documents from 1964 to the present and current (probably the last five years) NATO documents. Major components of the DS&RS include: One Prime 9750 computer, four hard disk drives, five search and retrieval devices, an image processor, five high resolution document viewing terminals, and five printers. Initial procurement and delivery of equipment occurred in FY 86, 87, and 88. Future costs include software enhancements, equipment purchase, equipment maintenance, document conversion, and networking of the system in the Joint Staff. A computer output microfiche (COM) capability is envisioned to support travel requirements. The system also is capable of assimilating selected document sets from the Joint Staff directorates to consolidate agency archiving.

JRP JUSTIFICATION: The advice and responses the Joint Staff provides to the National Command Authority, CJCS, DJS, JCS, CINCs, and other defense agencies must be timely. Research and research products are an integral part of Joint Staff action officer input to this process. The Document Storage and Retrieval System provides a fast, reliable, fully automated research service to satisfy thousands of queries per year, and will replace existing research systems (JISR, PDPRS, and NATO DOC) which are partially automated.

SUBELEMENTS:

- Documents Storage and Retrieval System (DS&RS)
- Joint Information Search and Retrieval Database (JISR)
- Pre-1967 Decision Papers Research System Database (PDPRS)
- NATO Document Subregistry Database (NATO DOC)

RECORDS AND INFORMATION RESOURCES SYSTEM (RAIRS)

DIRECTORATE: SJCS

IRM GOALS AND OBJECTIVES: 88-1c, 88-2b, 88-3a, 88-3b, 88-3c, 88-4c, 88-5c

JRP DESCRIPTION: The Records and Information Resources System (RAIRS) consists of three separate but related automated systems which support action tracking, records management, and document control and accountability in the Joint Staff. The Action Tracking System (ATS) is a data base which monitors actions suspensed by the CJCS, DJS, and individual directorates and has the capability to produce ad hoc reports as required for suspense management. The Automated Records Management System (ARMS) will provide the Joint Staff a vehicle to manage records and information in all forms in accordance with Federal law and the Joint Staff Records Management Guide. The Automated System for Document Accountability (ASDA) will improve the control of information and documentation in the Joint Staff and fully automate the receipting and destruction certification process for classified material.

JRP JUSTIFICATION: ATS, ARMS, and ASDA will enhance the ability of the Joint Staff to provide timely advice to the National Command Authority, to manage the documents and information generated in that process in accordance with information resource management law and policy and to control and account for classified and sensitive information. Manual systems which would have to be maintained in the absence of this automated support would be less effective and efficient and labor intensive.

SUBELEMENTS:

- Action Tracking System (ATS)
- Automated Records Management System (ARMS)
- Automated System for Document Accountability (ASDA)

SJCS ADMINISTRATIVE SUPPORT PROGRAM (SASP)

DIRECTORATE: SJCS

IRM GOALS AND OBJECTIVES: 88-2b, 88-3a, 88-3b, 88-3c, 88-4a, 88-4c, 88-5a, 88-5b, 88-5c

JRP DESCRIPTION: The SASP consists of the following separate automated systems:

The Document Declassification Report System (DDRS) - a comprehensive listing of JCS/CCS papers declassified in the Joint Staff Systematic Declassification Review Program which is provided to the Services, National Archives and other interested agencies.

The Freedom of Information and Library System (FOILS) - a comprehensive list of documents reviewed (with disposition) pursuant to requests under the Freedom of Information Act or Executive Order 12356 which is regularly accessed when working new requests to insure that the Joint Staff is not double tasked.

The General Accounting Office/Department of Defense Audit System (GAO/DoD(A)) - a data base which allows SJCS to retrieve essential information on all surveys and audits which impact on or require action in the Joint Staff.

The Joint Strategic Planning System Document Inventory (JSPSD) - a listing which reflects distribution of the Joint Strategic Planning System documents and is used to conduct the annual/semi-annual sighting of each document per JCS MOP 39.

The Register of Numbered JCS Papers (RNJP) - a listing of all numbered JCS paper produced in a calendar year which is distributed in register format throughout the Joint Staff and to the Services for appropriate use.

The General/Flag Officer Position System (G/FOPS) - a data base containing information critical to the management of approximately 300 nominative general/flag officer positions.

JRP JUSTIFICATION: Each of the above described systems provides critical automated support for specific SJCS missions which, if unavailable, would require development of resource intensive manual alternatives.

SUBELEMENTS:

- Document Declassification Report System (DDRS)

- Freedom of Information Library System (FOILS)
- General Accounting Office/Department of Defense Audit System (GAO/DOD(A))
- Joint Strategic Planning System Document Inventory (JSPSD)
- Register of Numbered JCS Papers (RNJP)
- General/Flag Officer Position System (G/FOPS)

HISTORICAL PUBLICATION

DIRECTORATE: SJCS

IRM GOALS AND OBJECTIVES: 88-2b, 88-3b, 88-4c --

JRP DESCRIPTION: The entire series of classified volumes of JCS history are being declassified and will be published in unclassified form by the Government Printing Office. They must be edited, indexed and prepared for publication.

JRP JUSTIFICATION: The Historical Division does not have the manpower resources required to edit, index and prepare the volumes for publication. Consequently, those services must be obtained by contract. Systematic publication of these histories insures that the vital and central role of the JCS in the formulation of national security policy is accurately and thoroughly portrayed to the public at large.

OCJCS AUTOMATED SUPPORT ITEMS

DIRECTORATE: OCJCS

IRM GOALS AND OBJECTIVES: 88-2b, 88-3c, 88-4c, 88-5b, 88-5c

JRP DESCRIPTION: OCJCS has two automated support elements. The first consists of two administrative databases that log, track, and control all actions/documents in the Office of the Chairman (CIMS/CMEMO). The second consists of two subscriptions to unclassified informational databases to provide the Chairman and the Vice Chairman with specific legal and legislative information and more general information on current national defense issues.

JRP JUSTIFICATION: The CJCS Information Management System (CIMS) and the Chairman's Memo System (CMEMO) are the only sources of administrative information on six years of OCJCS documents. They and/or their sucessors are absolutely essential for control of OCJCS documents and actions.

LEXIS/NEXIS and LEGI-SLATE provide alomost real-time access to information on the progress of legislation and other congressional issues. Without these services, CJCS and VCJCS would not be able to keep abreast of the important legal and legislative issues of joint issues.

SUBELEMENTS:

- CJCS Information Management System (CIMS)
- Chairman's Memo System (CMEMO)
- LEXIS/NEXIS Access
- LEGI-SLATE Access

RELATIONSHIP BETWEEN JRPs AND IRM GOALS AND OBJECTIVES

JOINT REQUIREMENTS PACKAGES (JRPs)	IRM GOALS AND OBJECTIVES																										
	88-1			88-2			88-3			88-4				88-5			88-6				88-7	
	a	b	c	a	b		a	b	c	a	b	c	d	a	b	c	a	b	c	d	a	b
J-1																						
Manpower Management					•			•	•					•	•							
Joint Duty Assignment Management Information System					•			•	•					•	•							
J-3																						
Nuclear Operations Systems Support	•	•		•	•		•	•	•													
Conventional Operations Systems Support	•	•		•	•		•	•	•													
NMCS Operations Systems Support	•	•		•	•		•	•	•													
Psychological Operations Systems Support	•	•		•	•		•	•	•													
J-4																						
Logistics Resources Systems				•	•		•	•	•					•								
Logistics Systems Engineering	•	•			•			•	•													
Mobility Modeling and Analysis					•			•	•									•				
Logistics Planning		•			•			•	•					•								
Logistic Analysis Systems					•		•	•	•		•											
Logistic Concept Development	•	•			•				•		•			•								
Joint Medical Mobilization System					•			•	•					•	•							
7th CG Support to the Joint Staff				•	•																	
Logistics Readiness Center	•	•			•			•	•	•		•		•	•						•	
J-5																						
Strategic Force Planning					•			•		•	•	•	•						•			
International Negotiations Systems					•		•	•						•	•	•						
Politico-Military Planning					•		•	•		•						•						
Long-Range Defense Planning	•				•		•			•			•			•						
J-6																						
Defense-Wide C3 Systems Support					•		•	•														

JOINT REQUIREMENTS PACKAGES (JRPs)	IRM GOALS AND OBJECTIVES																								
	88-1			88-2		88-3			88-4				88-5			88-6				88-7	
	a	b	c	a	b	a	b	c	a	b	c	d	a	b	c	a	b	c	d	a	b
J-7																					
Joint Planning Concept and Development	•	•	•		•	•	•	•	•	•	•	•	•	•	•			•		•	
Joint Training and Education Support					•															•	
Joint Interoperability Support	•	•	•																		
J-8																					
CINC Studies Program																					
Force Planning, Programming, Budgeting Analysis	•	•	•	•	•	•	•	•													•
CINC Wargaming Support	•	•	•	•	•	•	•	•													•
Military Net Assessment & Conventional Force Analysis	•	•	•	•	•	•	•	•													•
Nuclear Forces Analysis	•	•	•	•	•	•	•	•													•
Modern Aids to Planning Program	•	•	•	•	•	•	•	•													•
DIRM																					
Current Operations	•	•	•		•							•			•			•			•
JSSIS Additional Contracts	•	•	•		•							•				•					
Joint Staff Integration Effort	•	•	•		•					•		•			•	•	•	•		•	
Corporate Data Base	•				•	•	•	•	•	•	•	•	•	•	•	•					
High Density Storage	•		•		•							•		•	•	•					
JSSIS Follow-On	•	•	•		•					•		•				•	•	•			
Integrated Telephone System			•		•					•							•	•			
SJS																					
Document Storage and Retrieval System	•				•	•	•	•	•		•				•	•	•				
Records and Information Resources System	•				•	•	•	•			•				•						
SJCS Administrative Support Program					•	•	•	•	•		•		•	•	•						
Historical Publication					•		•				•										
OCJCS																					
OCJCS Automated Support Items					•			•			•			•	•						